TB82 - Filter-Regulator – Combination Excelon® Plus Modular System

- Port size: 1/4" & 3/8" (ISO G/PTF)
- Unique Quikclamp connection system offers full modularity
- 40 micron particle and high efficiency water removal (> 95%)
- Double safety lock on bowl
- Shut off valve & Filter-Regulator with tamper resistance feature
- Metal bowl with prismatic liquid level indicator
- Light weight polycarbonate bowl
- High Corrosion resistance: Body and Metal bowl with Electrophoretic Paint finish
- Easy to read flush mounted integrated pressure gauge as standard
- Ex DoC in accordance with 2014/34/EU/ATEX

Technical features

Medium:
Compressed air only
Maximum supply pressure:
Polycarbonate bowl: 10 bar (145 psi)
Metal bowl: 17 bar (246 psi)

Outlet pressure ranges:
0,3 ...10 bar (4 ... 145 psi)

Filter element:
40 µm

Port size:
G1/4, G3/8, 1/4 PTF, 3/8 PTF

Gauge:
Integrated as standard

Diaphragm Type:
Relieving

Drain:
Manual or automatic
Automatic drain operating conditions (float operated):
Bowl pressure required to close drain: > 0.35 bar (5 psi)
Bowl pressure required to open drain: ≤ 0.2 bar (2.9 psi)
Minimum air flow required to close drain: 1 dm^3/s.

Ambient/Media temperature:
Polycarbonat bowl:
-10 ... +60°C (+14 ... +140°F)
Metal bowl:
-20 ... +65°C (-4 ... +149°F)
Air supply must be dry enough to avoid ice formation at temperatures below +2°C (+35°F).

Atex:
T82 + B82 are in conformity with Atex 2014/34/EU
Ex II 2 GD
Ex h IIC T6 Gb
EX h IIIC T85°C Db

Materials:
Body: Die cast aluminum
Body covers: ABS
Bonnet: Acetal
Valve: PP with Geolast seals
Transparent Bowl:
Polycarbonate with Polypropylene Guard.
Metal Bowl: Die cast Zinc with PA liquid level indicator lens
Filter element: sintered PP
Bowl 'o'- ring: Chloroprene
Elastomers: NBR

Technical data TB82 - standard models

Symbol	Port Size	Shutoff Valve	Drain	Weight (kg)	Model *1)
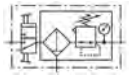	G1/4	With	Manual	0,7	TB82-221G
	G3/8	With	Manual	0,7	TB82-321G
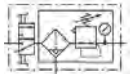	G1/4	With	Auto	0,7	TB82-201G
	G3/8	With	Auto	0,7	TB82-301G

*1) All models shown here are supplied with guarded transparent bowl, brackets and integrated gauge applicable for flow direction left to right
With flow direction right to left please use the online configurator www.norgren.com/en/support/configurators/air-preparation-configurator or contact Norgren

In addition to the standard box set units shown on this data sheet, further combinations can be configured using our online Air Preparation configurator:

www.norgren.com/en/support/configurators/air-preparation-configurator

Option selector *1)

TB82-★★1★

Port size	Substitute
1/4"	2
3/8"	3

Units	Substitute
Filter-Regulator w. auto drain, polycarbonate bowls	0
Filter-Regulator w. manual drain, polycarbonate bowls	2
Filter-Regulator w. auto drain, metal bowls	5
Filter-Regulator w. manual drain, metal bowls	7

Thread form	Substitute
PTF	A
ISO G (standard)	G

*1) All models shown here are applicable for flow direction left to right.
With flow direction right to left please use the online configurator
www.norgren.com/en/support/configurators/air-preparation-configurator
or contact Norgren

Excelon® Plus adheres to the following harmoised standard and technical specifications:

2014/34/EU Equipment and protective systems intended for use in potentially explosive atmospheres.
The following harmonised standards and technical specifications have been applied ISO 4414:2010 – Pneumatic fluid power – General rules and safety requirements for systems and their components; ISO 80079-36:2016 – Explosive atmospheres – Part 36: Non-electrical equipment for explosive atmospheres – Basic method and requirements; ISO 80079-37:2016 – Explosive atmospheres
Part 37: Non-electrical equipment for explosive atmospheres – Non-electrical type of protection constructional safety ''c'', control of ignition sources ''b'', liquid immersion ''k''.

II 2 GD

Ex h IIC T6 Gb
Ex h IIIC T85°C Db
N° de certification ATEX : NORGREN 18.0001X

For a copy of the Declaration of Conformity (DoC) please use the link http://cdn.norgren.com/pdf/IM_Excelon_Plus_EN_final.pdf

Flow characteristics

Inlet pressure: 10 bar (145 psi)
Range: 0.3...10 bar (4...145 psi)
Port size: 1/4", 40 µm element

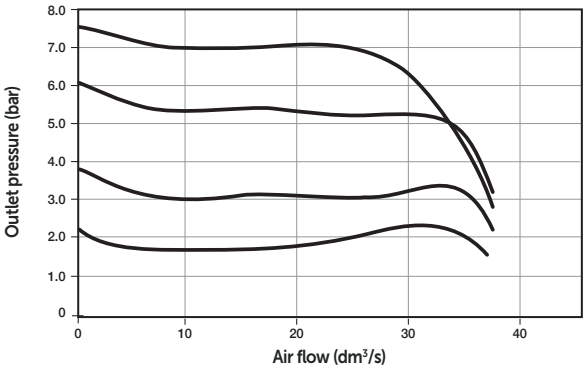

Inlet pressure: 10 bar (145 psi)
Range: 0.3...10 bar (4...145 psi)
Port size: 3/8", 40 µm element

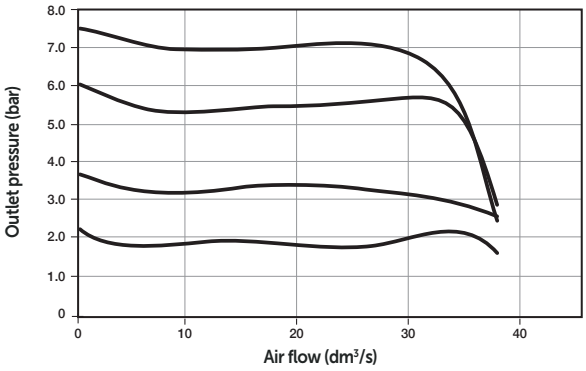

Accessories

Quikclamp

Page 6

820014-51KIT

Quikclamp with bracket assem-bled

Page 6

820014-52KIT

Pressure sensing block
1/4 PTF

Page 6

820016-50KIT

Pressure sensing block
G1/4

Page 6

820016-51KIT

Integrated gauge
10 bar gauge

820073-01KIT

Integrated gauge
20 bar gauge

820073-02KIT

Integrated gauge
4 bar gauge

820073-03KIT

Gauge adaptor kit
1/8 PTF

820143-01KIT

Gauge adaptor kit
R 1/8

820143-02KIT

Porting block
3/8" PTF

820028-50KIT

Porting block
G3/8

820028-53KIT

Port Adaptors

Page 7

1/4 PTF	820015-02KIT
3/8 PTF	820015-03KIT
G1/4	820015-08KIT
G3/8	820015-09KIT

Note : Quantity 1 per KIT

Pressure switch interface block
(18D pressure switch) G1/4

0523109000000000

Pressure switch 18D
(0,5 ... 8bar) *1

0881300

Digital pressure switch
51D (-1 ... 10 bar) *2

0860810

*1) Flanged version. For other pressure ranges, please see data sheet 5.11.001

*2) For other pressure ranges, please see data sheet 5.11.385

Padlock

Padlock

840055-01KIT

Lockout device

840055-02KIT

Silencer

Porous plastic silencer *3) G1/4

M/S2

Porous plastic silencer *3) G1/4

0014600000000000

Sinter bronce silencer *3) 1/4
PTF

MS002A

Sinter bronce silencer *3) G1/4

T40C2800

*3) Max. pressure of silencers listed in this data sheet : 10 bar. For pressure higher than 10 bar please contact Norgren

Maintenance/Service

Auto drain kit with metal Nut - Imperial

6000-61KIT

Auto drain kit with metal Nut - Metric

6000-60KIT

Filter cartridges 40 micron

820038-51KIT

Spare parts

Filter Bowl (Guarded Poly bowl with auto drain 6 mm PIF)

820025-51KIT

Filter Bowl (Guarded Poly bowl with manual drain)

820025-50KIT

Filter Bowl (Metal with S/Glass & auto drain, 6 mm PIF)

820003-51KIT

Filter Bowl (Metal with S/Glass & manual drain)

820003-50KIT

Dimensions
Shut-off valve and Filter-Regulator

Dimensions in mm
Projection/First angle

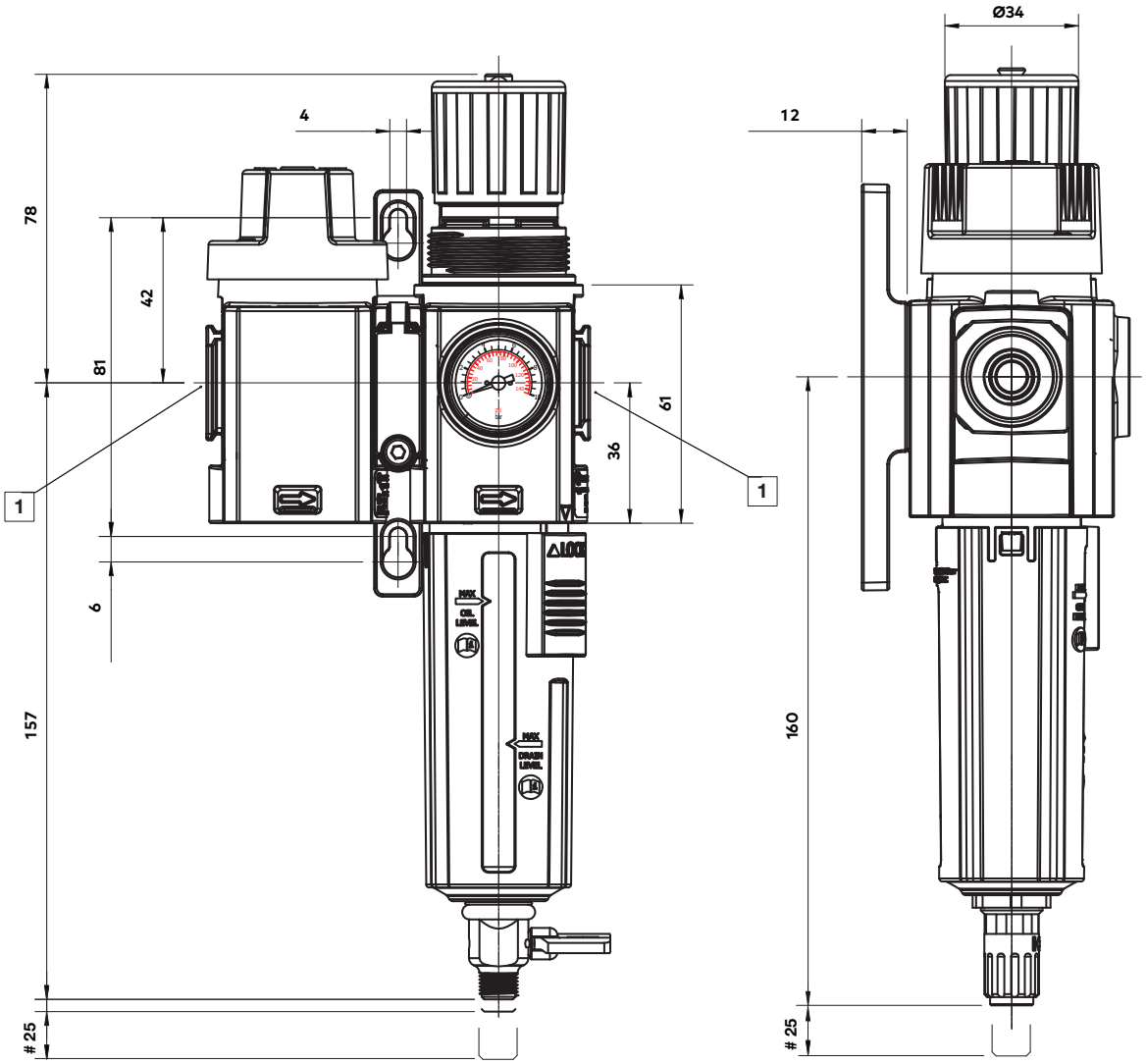

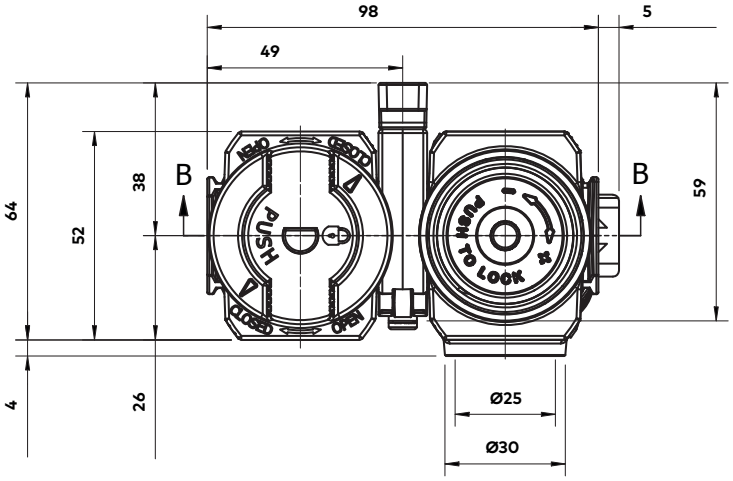

Minimum clearance for bowl removal
1 Main ports 1/4", 3/8"(ISO G/PTF)

Accessories

Dimensions in mm
Projection/First angle

Quikclamp with wall bracket

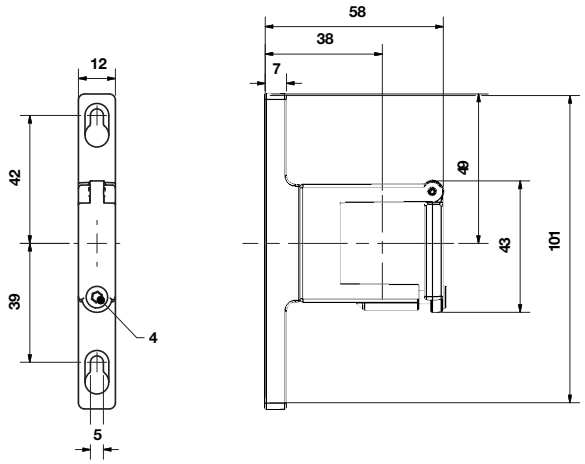

Quikclamp

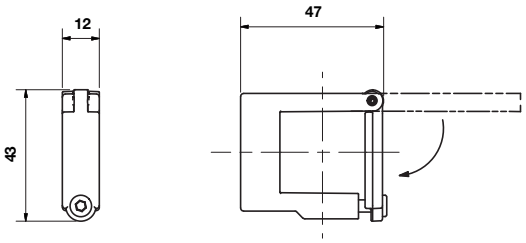

Pressure sensing block

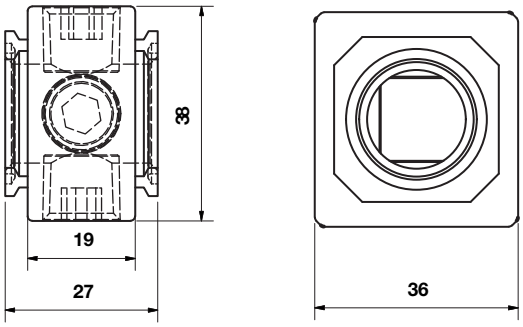

Full flow porting block

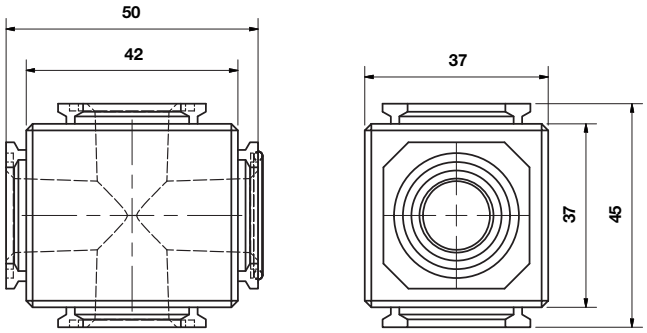

Porting block for 18D pressure switch

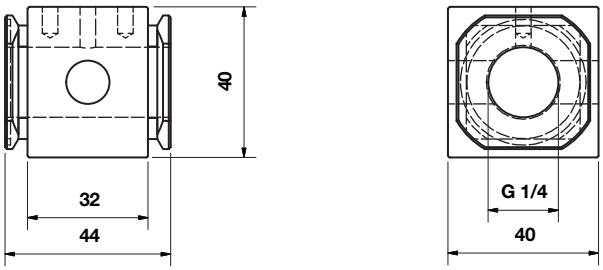

18D Pressure switch

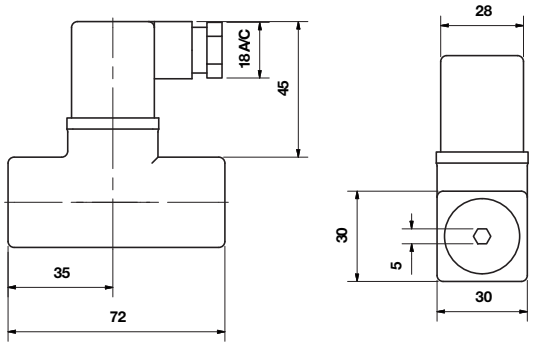

18D Porting block and 18D assembled

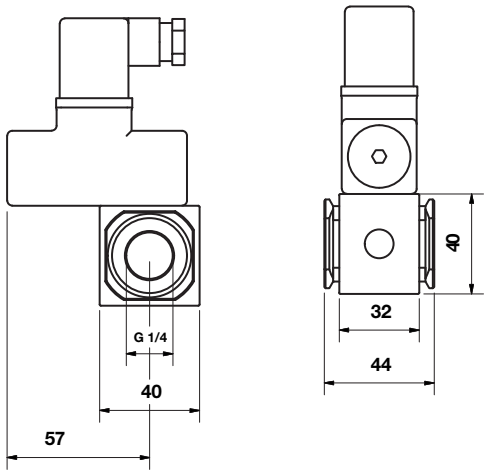

Pipe adaptor

Dimensions in mm
Projection/First angle

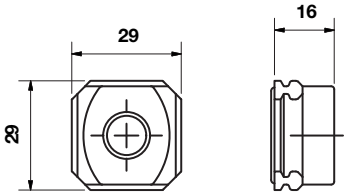

51D Pressure switch - digital

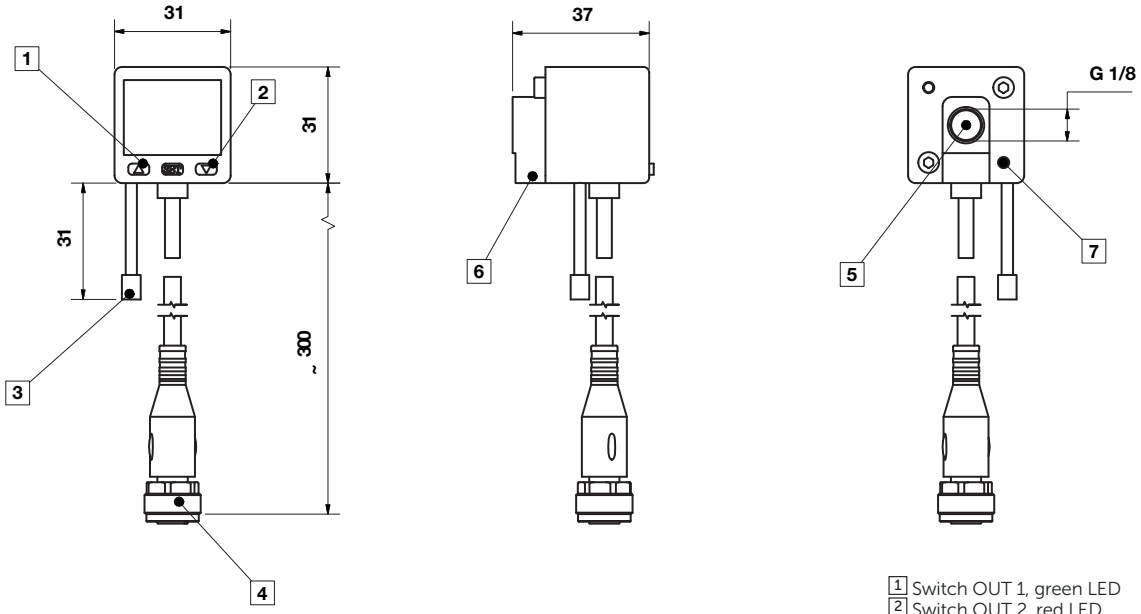

1 Switch OUT 1, green LED
2 Switch OUT 2, red LED
3 Dustproof protector
4 Connector M12 x 1
5 Inlet port
6 Alternative inlet port G1/8 plugged
7 Thread for mounting screw

Warning

These products are intended for use in industrial compressed air systems only. Do not use these products where pressures and temperatures can exceed those listed under **»Technical features/ data«.**
Before using these products with fluids other than those specified, for non-industrial applications, life-support systems or other applications not within published specifications, consult Norgren Ltd.
Through misuse, age, or malfunction, components used in fluid power systems can fail in various modes.

The system designer is warned to consider the failure modes of all component parts used in fluid power systems and to provide adequate safeguards to prevent personal injury or damage to equipment in the event of such failure.
System designers must provide a warning to end users in the system instructional manual if protection against a failure mode cannot be adequately provided.
System designers and end users are cautioned to review specific warnings found in instruction sheets packed and shipped with these products.