Industrial Automation

IMI NORGREN®

Express Catalogue

www.imi-precision.com

Engineering GREAT Solutions

IMI Precision Engineering

Contents

All of our products are backed with an industry leading 2-year warranty. Our dedicated team of experts is on hand with technical advice, support and recommendations to help you get the most effective products, in the shortest timescales, and with the best possible service.
In the unlikely event of an item being out of stock, we will ship your item as a priority.

FEATURE PAGE

Engineering GREAT solutions

*We deliver **GREAT** solutions for our customers tackling the world's most demanding engineering challenges*

IMI Precision Engineering is a world leader in motion and fluid control technologies. Wherever precision, speed and engineering reliability are essential, we deliver exceptional solutions which improve the productivity and efficiency of our customers' equipment.

Part of IMI plc, we have a sales and service network in 75 countries, as well as manufacturing capability in the USA, Germany, China, UK, Switzerland, Czech Republic, Mexico and Brazil. We support this with our global centres of technical excellence, and facilities for CFD design and R&D testing. We employ a dedicated team of field engineers, sector specialists and key account managers – all committed to providing excellent service to our customers.

As a business, we aim to **UNDERSTAND** our customers' challenges. We then **CONNECT** our products, people and expertise in order to **DELIVER** exceptional service and solutions. These **IMPROVE** the performance of our customers' machinery.

We call this Engineering GREAT, and we deliver it to customers through a world-class portfolio of high performance products, through close partnerships and problem-solving, and through a global network of support which ensures reliable local delivery, all over the world.

How Express delivers value to our customers

Our Express service is designed with the specific purpose of making our expertise and products, easily and readily accessible online or on the telephone.

The Express Range

All of the products within this catalogue are Express items, meaning they are available from stock and ready for immediate dispatch.

These standard products are ideal for your new industrial automation project and for replacing broken or worn out parts in your existing applications.

Convenience, speed & availability

Giving customers access to IMI Precision Engineering's products quickly and easily by phone, catalogue or online, we offer a convenient and high quality 'one-stop shop' for all MRO needs.

Quality and choice

Rapid access to thousands of proven, high quality products which deliver superior performance, reduced maintenance and long-term cost benefit.

Technical advice & support

We offer unrivalled back-up, including expert technical advice, on-going training, in-house engineering and in-depth management information, helping customers get the most out of their products and driving down the total cost of ownership.

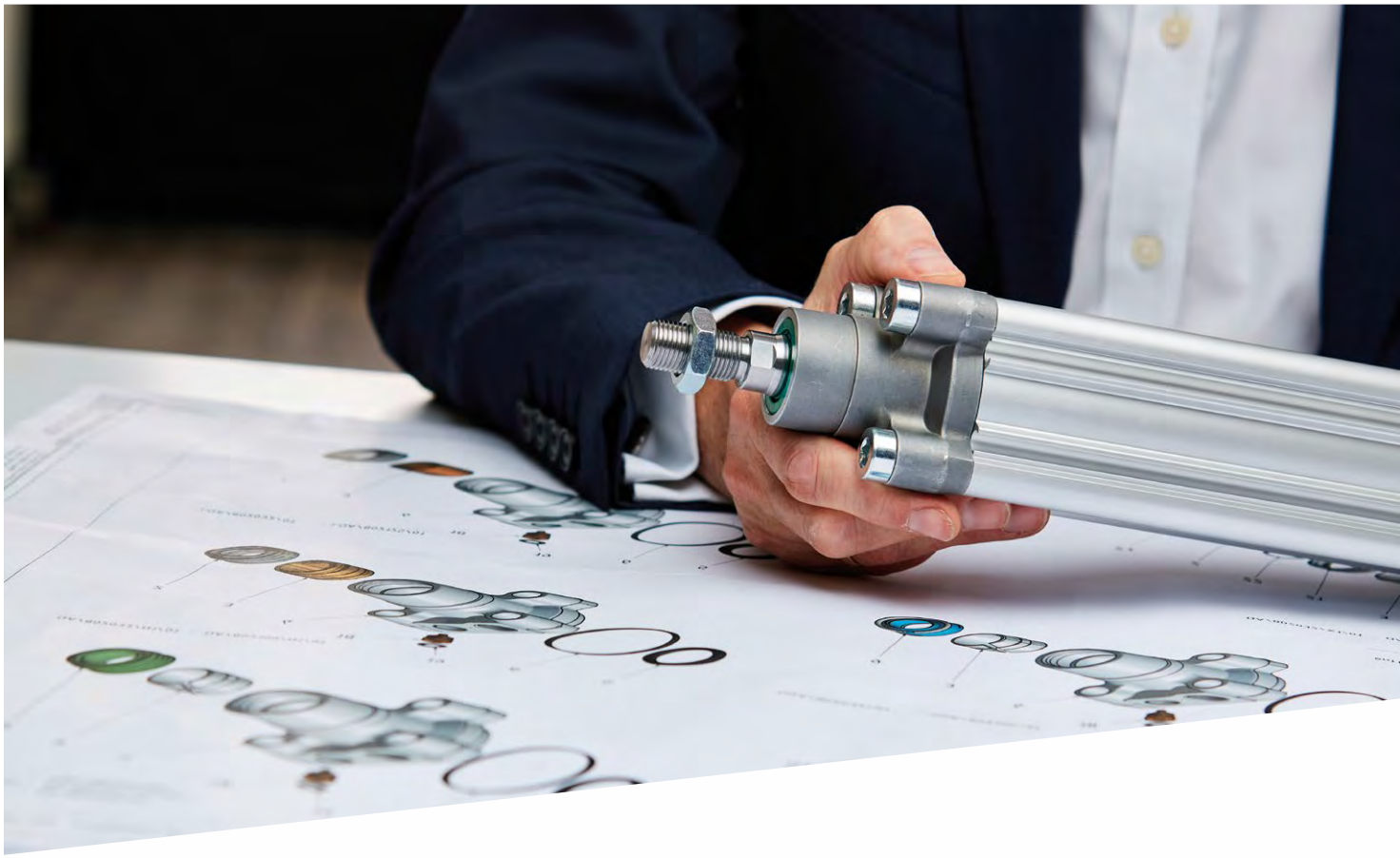

Our market leading product brands

The combination of our IMI Precision Engineering product brands' trusted reputation and long history underpins our position as a leading global supplier of motion and fluid control technologies.

IMI NORGREN®

With over 80 years industry experience, the IMI Norgren brand includes a wide range of high quality pneumatic and fluid control products such as actuators, air preparation products, pressure switches, fittings and valves.

IMI BUSCHJOST®

Successful in the market for over 60 years, IMI Buschjost is a market leading range of process and multimedia solenoid valve technology and system solutions.

IMI HERION®

For over 50 years the IMI Herion brand has specialised in solenoid valves, NAMUR valves and hydraulic solutions for mechanical and pneumatic press and press safety technology.

Selecting the model you need couldn´t be simpler

Our high performance products improve performance and productivity in Industrial Automation. This catalogue includes a number of features designed to help you select and order the best parts, quickly and efficiently.

Part numbers & technical information

Each product page includes part numbers, a photo and technical information – everything you need to order the right model.

Speed of delivery

The products listed in this catalogue are available from stock, and we operate a truly global sales and service network, helping keep your equipment running – wherever you are.

Expertise

We're product and technical experts who understand your technical challenges. Our dedicated support team is fully trained to help you find the product, data or application support you need – fast.

Fast-track actuators

We can assemble a bespoke actuator tailored to your exact requirements at short notice.

Call or email us for more information.

Responsible Business

This symbol highlights products which make a special contribution to sustainable engineering – e.g. energy efficient components or energy savings.

Product Links & Product Plus

To save you time, our Product Links box recommends products that support and complement the ones you're buying.

Product Plus also offers additional tips on product application and 'best practice'.

PRODUCT PLUS

Guide Block...

Guide blocks can be fitted to standard actuators to allow high axial loads to be applied to the end of the piston rod. They provide accurate piston rod guidance, come complete with centering sleeves and conform to ISO6432.

Our full Express product range is available in each country


IMI Precision Engineering
Login | Register
0161 655 7300
Search
IMI NORGREN
IMI BUSCHJOST
IMI FAS
IMI HERION
IMI MAXSEAL
Products
Expertise
Technical Support
Help
About
Basket (0 Items)
Certification
CAD
Configurators
Finding Alternatives
Training
Software
Catalogues
Brochures
Mobile App
select non-standard stroke lengths, choose high temperature seals and more, and then add mountings and proximity switches. Once you're done, you can get price and delivery information and complete your purchase online.
Email
uk@imi-precision.com
Our expert teams are available to answer your emails 8.45am to 5pm, Monday to Thursday and 8.45am to 4pm on Friday.
You can also download your configuration in your native CAD format. We support 60+ native CAD formats including AutoCAD, SolidWorks, Pro/Engineer, NX and Catia.
Ranges
PRA/802000/M
Cylinder conforms to ISO 15552
High performance adaptive cushioning system "ACS"

New online services

To improve your experience, we have introduced a range of web services, including a dedicated and intuitive competitor conversion tool, a new mobile website, and we have also introduced a new product configurator with improved CAD capabilities. We're engineering GREAT access to our products and services to help you save time and work more efficiently.

Configuration and CAD

Quickly and easily configure pneumatic cylinders, including the addition of mountings and accessories. It provides price and availability throughout the configuration process and the option to download a CAD file or purchase the completed configuration.

Part Converter

Looking for an IMI Precision Engineering alternative to competitor parts?

Try our new Part Converter. All you need is a full or partial part number to find the IMI Precision Engineering alternative. It tells you everything you need to know, including technical details and whether it's an exact or partial match. To make things even easier, you can link straight through to the recommended alternative, review the technical detail and buy it there and then.

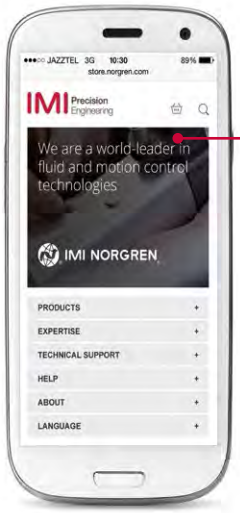

Mobile

Our new mobile website lets you purchase products straight from your mobile phone or tablet, wherever you are!

Complete with images and technical information, our new mobile website gives you all the product details you will need to purchase, even out on the factory floor.

Purchase online securely and quickly

With our online website, the entire search, order and delivery process allows you to buy online with confidence:

Selection

Find the product you need in seconds, from over 10,000 catalogue products. All it takes is part or all of the part number. Or alternatively, search the detailed product information pages.

Support

Select precisely the right product based on detailed technical information, datasheets, CAD drawings, price and availability – all easily accessible online.

Ordering

If you know the products you want to add quickly to your basket, our quick basket allows you to enter the product number and quantity, with the help of predictive search functions. Alternatively, copy large lists of items from your purchasing system, spreadsheet, email or word processing document directly into the paste basket and order securely online, 24/7.

Tracking

Track your order using the tracking link. We'll also notify you by email when the items are shipped and out for delivery.

Purchase products straight from your mobile phone or tablet

Product sections

Engineering GREAT Solutions

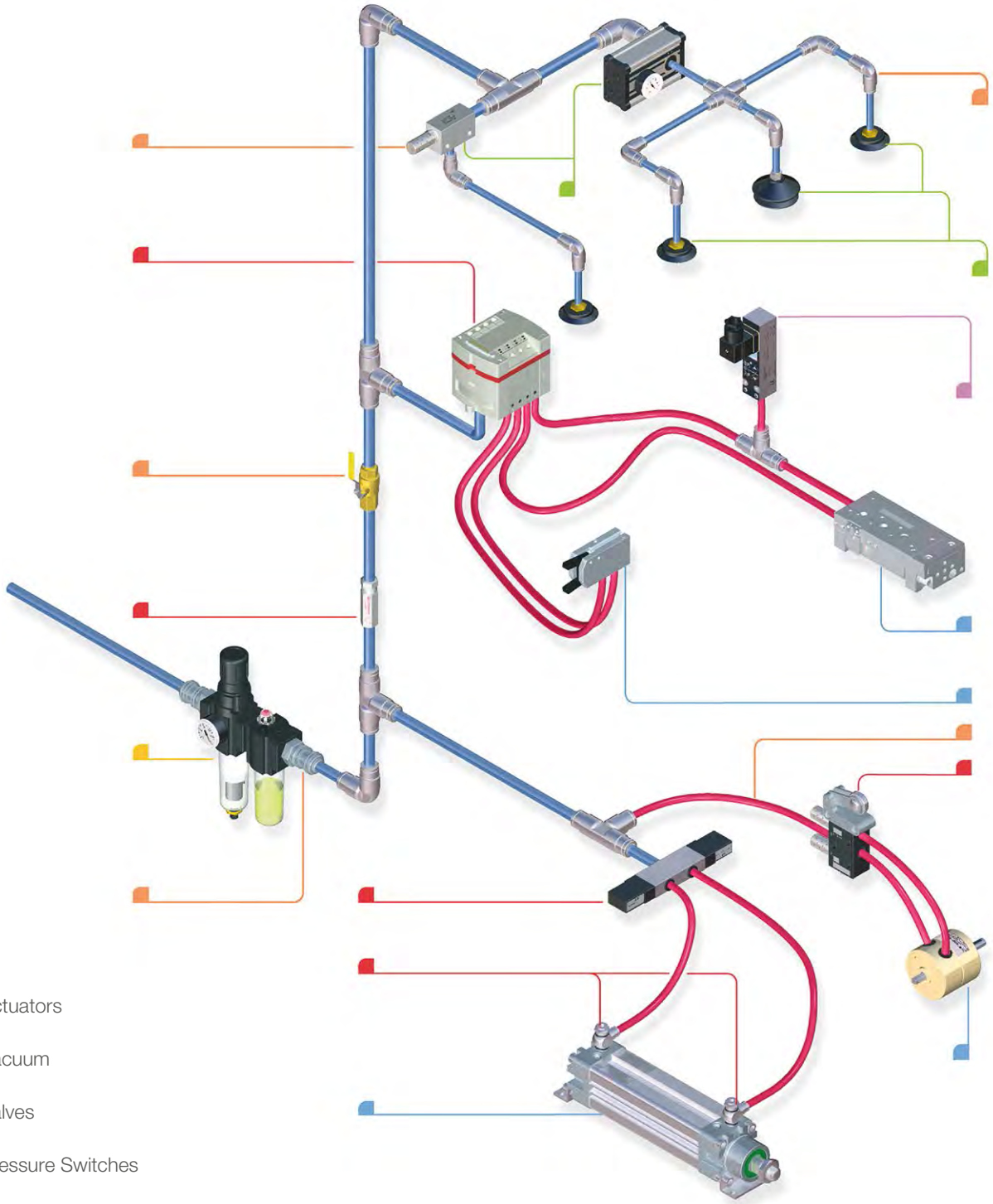

- Actuators
- Vacuum
- Valves
- Pressure Switches
- Air Preparation
- Fittings

Actuators

A vast array of actuators – from ISO/VDMA profile to compact short stroke, rodless and roundline cylinders to rotary actuators, a range of shock absorbers and our more traditional actuator ranges. In this catalogue we have listed the part numbers of hundreds of ex-stock configurations, available off the shelf for rapid delivery.

A whole selection of simple and complex specifications are just a phone call or email away contact the Team for rapid, expert advice on the right product for your application. Each item is clearly listed to help ensure you get everything you need to get the job done.

Industry standard or something different?

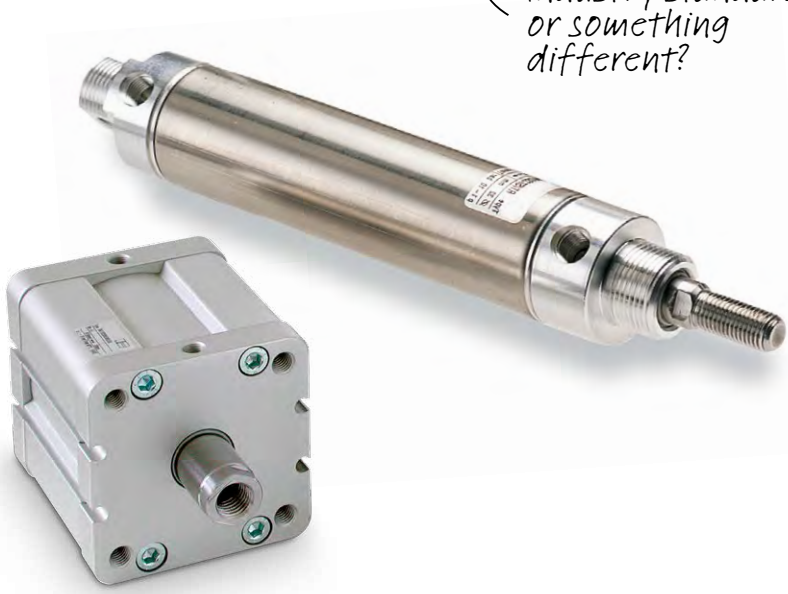

Compact or ultra compact?

Fast Find Guide

Please note: These products represent only part of the IMI Precision Engineering actuator range. If you can't see the option you require please contact us.

■ Single Acting
■ Double Acting

Roundline Cylinders

RM/8000/M ■
ISO 6432
Ø 10 … 25 mm

Page 16

RT/57200/M ■
Ø 10 … 63 mm

Page 19

Compact Cylinders

RA/192000/MX ■
ISO 21287
Ø 20 … 50 mm

Page 23

RM/92000/M ■
Ø 12 … 100 mm

Page 26

Profile Cylinders

PRA/802000/M, RA/802000/M, RA/8000/M ■
ISO 15552
Ø 32 ... 320 mm

Page 30

PRA/882000/M IVAC Clean Line ■
Ø 32 … 63 mm

Page 36

Air Bellows

M/31000 ■
Ø 6 … 16"

Page 39

PM/31000 ■
Ø 2 3/4 … 12"

Page 40

Switches

M/50 (Reed and solid state)

Page 42

Mountings

Series		Page
Roundline cylinders	RM/8000/M (ISO/VDMA cylinders)	16
	RT/57200/M	19
Compact cylinders	RA/192000/MX (ISO cylinders)	23
	RM/92000/M	26
Profile cylinders	PRA/802000/M, RA/802000/M, RA/8000/M	33
	PRA/882000/M (IVAC cylinder)	36

CYLINDER SIZING AND SPEED CONTROL

Cylinder sizing for thrust

The theoretical thrust (outstroke) or pull (instroke) of a cylinder is calculated by multiplying the effective area of the piston by the working pressure. The effective area for thrust is the full area of the cylinder bore. The effective area for pull is reduced by the cross section area of the piston rod.

Current practice specifies bore (D) and piston rod diameter (d) in millimetres and working pressure (P) in bar gauge. In the formula, P is divided by 10 to express pressure in Newtons (N)

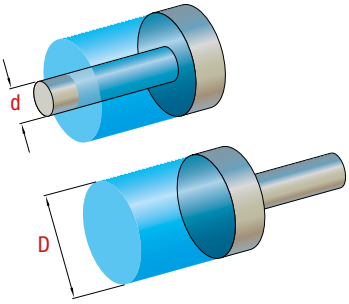

The theoretical force (F) is given by

Thrust $F = \frac{\pi D^2 P}{40} = N$

Pull $F = \frac{\pi (D^2 - d^2) P}{40} = N$

Where

D = Cylinder bore in millimetres

d = Piston rod diameter in millimetres

P = Pressure in bar

F = Thrust or Pull in Newtons

Example: Find the theoretical thrust and pull of a 50 mm bore cylinder supplied with a pressure of 8 bar

Thrust $F = \frac{\pi 50^2 .8}{40} = 1571$ N

Pull $F = \frac{\pi (50^2 - 20^2).8}{40} = 1319$ N

Table of thrust and pulls, double acting cylinders

Cylinder bore mm (inches)	Piston rod diameter mm (inches)	Thrust N at 6 bar	Pull N at 6 bar
8	3	30	25
10	4	47	39
12	6	67	50
16	6	120	103
20	8	188	158
25	10	294	246
32	12	482	414
40	16	753	633
44,45 (1,75)	16	931	810
50	20	1178	989
63	20	1870	1681
76,2 (3)	25	2736	2441
80	25	3015	2721
100	25	4712	4418
125	32	7363	6881
152,4 (6)	(1,5)	10944	10260
160	40	12063	11309
200	40	18849	18095
250	50	29452	28274
304,8 (12)	(2,25)	43779	42240
320	63	48254	46384
355,6 (14)	(2,25)	59588	58049

Correct sizing of pneumatic actuators is based upon knowledge of the required force and the applied air pressure. Theoretical thrust and pull of both single and double acting cylinders is shown on the accompanying tables and is calculated by multiplying the effective piston area by the working pressure. Units are generally shown in Newtons (kg x 9,81 = N). Note the difference in thrust and pull figures on double acting rodded cylinders due to the reduction made by the piston rod area. These figures are purely theoretical, and make no allowance for frictional losses, pressure differences, leakage, or a 'safety factor'. It is strongly recommended that a factor of safety be included in all sizing calculations – on all dynamic applications this should be 50%, and on static applications 5%.

Pneumatic actuators generally work best and can be better controlled when well within their load capacity, and this safety factor should always be considered to reduce potential issues during operation. In addition, when working at ultra slow speeds, control will be improved if the cylinder is oversized and working well within it's total capacity. All figures shown represent theoretical thrust at 6 bar (gauge). For working pressures other than this figure, simply divide the figure shown by 6 and multiply by the desired pressure to arrive at new values.

Table of consumption

Bore mm	Rod mm	Push stroke consumption dm^3/mm of stroke at 6 bar	Pull stroke consumption dm^3/mm of stroke at 6 bar	Combined consumption dm^3/mm of stroke/cycle
10	4	0,00054	0,00046	0,00100
12	6	0,00079	0,00065	0,00144
16	6	0,00141	0,00121	0,00262
20	8	0,00220	0,00185	0,00405
25	10	0,00344	0,00289	0,00633
32	12	0,00563	0,00484	0,01047
40	16	0,00880	0,00739	0,01619
50	20	0,01374	0,01155	0,02529
63	20	0,02182	0,01962	0,04144
80	25	0,03519	0,03175	0,06694
100	25	0,05498	0,05154	0,10652
125	32	0,08590	0,08027	0,16617
160	40	0,14074	0,13195	0,27269
200	40	0,21991	0,21112	0,43103
250	50	0,34361	0,32987	0,67348

Table of thrust and pulls, single acting cylinders

Cylinder bore mm (inches)	Thrust N at 6 bar	Pull N at 6 bar
10	37	3
12	59	4
16	105	7
20	165	14
25	258	23
32	438	27
40	699	39
50	1102	48
63	1760	67
80	2892	86
100	4583	99

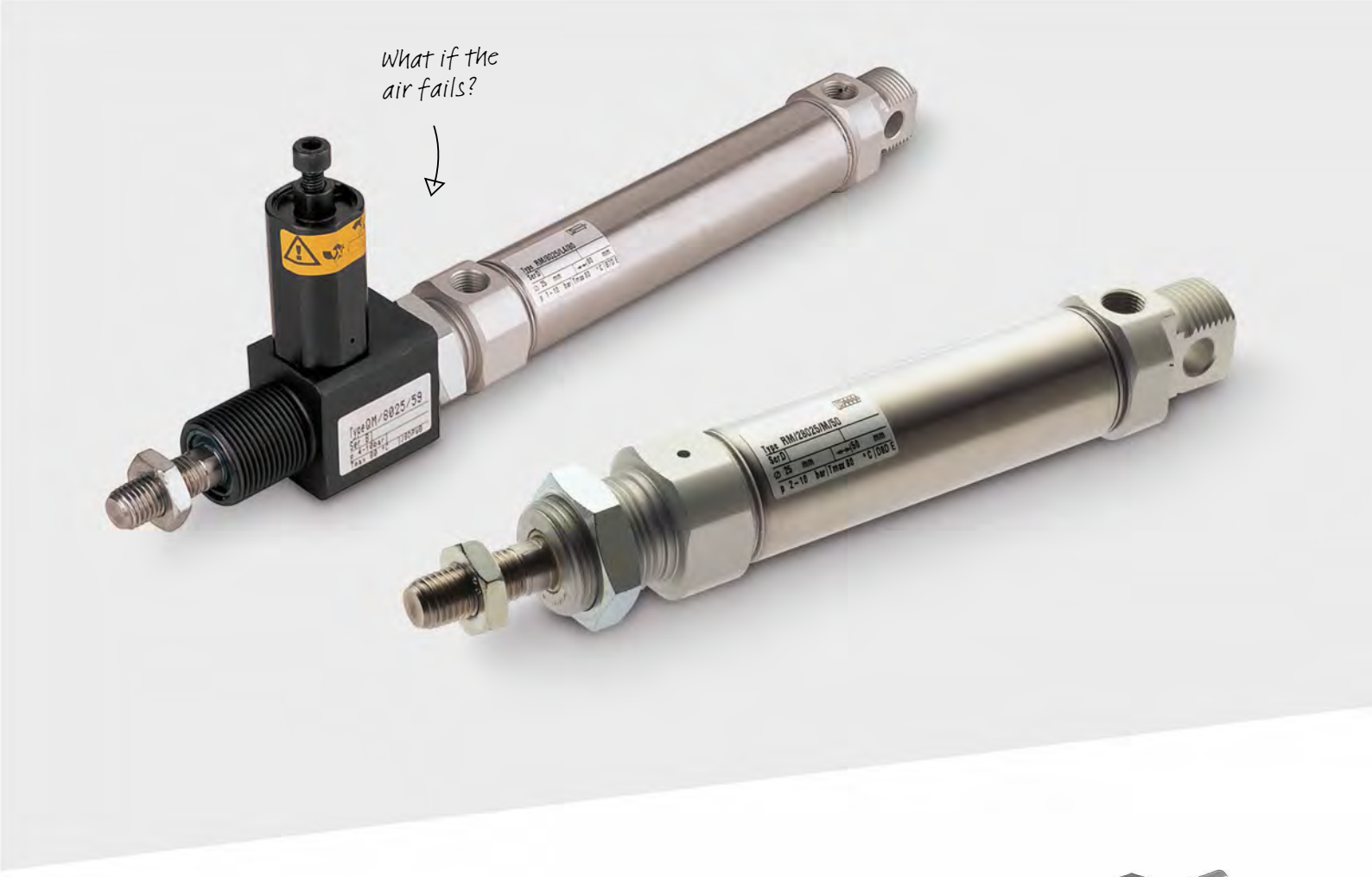

ISO Roundline cylinders

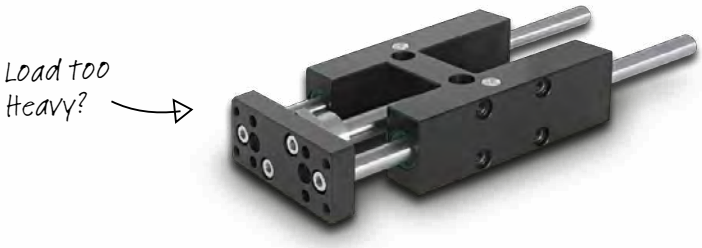

When applying pneumatic actuators to lighter duty, lower force applications, many machine builders tend to select a simple 'roundline' product. The most common of these are actuators that conform to ISO6432, a dimensional standard ensuring interchangeability between manufacturers.

A number of features make the ISO roundline cylinders stand apart from the competition:

- IMI Precision Engineering uses a 'Z' type low friction seal to support both low and high speed applications with operating life up to 10 million cycles
- The standard actuator is fully non-corrodible in standard applications. For more arduous environments, you can choose a stainless version
- If you're looking for a more specialised and cost-effective solution, choose from double ended or non-rotating piston rods, add a rod lock, select different end-cap styles to save space, add a guide block to improve load capacity, or fit high temperature seals
- Uses the standard IMI Norgren M/50 series switch (reed or solid state) as fitted to virtually the entire IMI Norgren actuator range

Engineering
GREAT Solutions

Find out more
www.imi-precision.com

IMI NORGREN

ISO ROUNDLINE CYLINDERS

RM/8000/M Double acting, ISO 6432 – Ø 10 … 25 mm

- Perfect for small to medium force applications
- Low friction 'Z' seals offer both high and low speed working and extremely long life
- Unit is fully non corrodible reducing the need for costly protection in more aggressive environments
- Choice of three end cap styles, and other technical variants, allows a wider use of standard products

Technical Data

Medium:
Compressed air, filtered, lubricated or non-lubricated

Operation:
Double acting, magnetic piston with buffer cushioning

Operating pressure:
1 … 10 bar

Ambient temperature:
-10°C … +80°C max.
Air supply must be dry enough to avoid ice formation at temperatures below +2°C

Dimensions

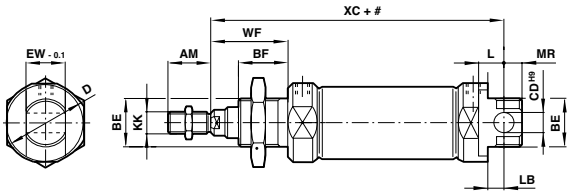

= Stroke

Dia. Ø	AM	BE	BF	Ø CD_{H9}	ØD	$EW_{-0.1}$	KK	L	LB	MR	WF	XC
10	12	M12x1,25	12	4	16,5	7,9	M4	6	2	8	16	64
12	16	M16x1,5	17	6	21	11,9	M6	9	3	8	22	75
16	16	M16x1,5	17	6	21	11,9	M6	9	4	7	22	82
20	20	M22x1,5	20	8	30	15,9	M8	12	3	11	24	95
25	22	M22x1,5	22	8	30	15,9	M10x1,25	12	7	9	28	104

PRODUCT LINKS

Valves…

Despite their different bore sizes and stroke length, improvements in valve technology mean that only a 1/8" ported valve is required to operate this entire range of actuators. Look to our V60 series on page 77 for more information for the simplest solution, or speak to your Express team if you have more complex requirements

PRODUCT PLUS

AK Mount…

Misalignment during operation is the most common cause of actuator failure which can result in expensive down time. Fitting a swivel mount (AK style) between the piston rod and machine will ensure that any error is removed and costs much less than a breakdown!

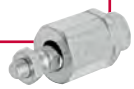

ISO ROUNDLINE CYLINDERS

RM/8000/M Double acting, ISO 6432 – Ø 10 … 25 mm

Models					Accessories				
Buffer Cushioning Model	**Dia. Ø**	**Stroke length**	**Port size**	**Piston rod Ø**	**Reed switch with integral 5 m cable**	**Switch mounting ≥15 mm stroke**	**Banjo flow control**	**Straight fitting**	**Elbow fitting**
									
RM/8010/M/10	10	10	M5	4	M/50/LSU/5V	–	C0K510405	C02250405	C02470405
RM/8010/M/25	10	25	M5	4	M/50/LSU/5V	QM/33/010/22	C0K510405	C02250405	C02470405
RM/8010/M/40	10	40	M5	4	M/50/LSU/5V	QM/33/010/22	C0K510405	C02250405	C02470405
RM/8010/M/50	10	50	M5	4	M/50/LSU/5V	QM/33/010/22	C0K510405	C02250405	C02470405
RM/8010/M/80	10	80	M5	4	M/50/LSU/5V	QM/33/010/22	C0K510405	C02250405	C02470405
RM/8010/M/100	10	100	M5	4	M/50/LSU/5V	QM/33/010/22	C0K510405	C02250405	C02470405
RM/8012/M/10	12	10	M5	6	M/50/LSU/5V	–	C0K510405	C02250405	C02470405
RM/8012/M/25	12	25	M5	6	M/50/LSU/5V	QM/33/012/22	C0K510405	C02250405	C02470405
RM/8012/M/40	12	40	M5	6	M/50/LSU/5V	QM/33/012/22	C0K510405	C02250405	C02470405
RM/8012/M/50	12	50	M5	6	M/50/LSU/5V	QM/33/012/22	C0K510405	C02250405	C02470405
RM/8012/M/80	12	80	M5	6	M/50/LSU/5V	QM/33/012/22	C0K510405	C02250405	C02470405
RM/8012/M/100	12	100	M5	6	M/50/LSU/5V	QM/33/012/22	C0K510405	C02250405	C02470405
RM/8016/M/10	16	10	M5	6	M/50/LSU/5V	–	C0K510405	C02250405	C02470405
RM/8016/M/25	16	25	M5	6	M/50/LSU/5V	QM/33/016/22	C0K510405	C02250405	C02470405
RM/8016/M/40	16	40	M5	6	M/50/LSU/5V	QM/33/016/22	C0K510405	C02250405	C02470405
RM/8016/M/50	16	50	M5	6	M/50/LSU/5V	QM/33/016/22	C0K510405	C02250405	C02470405
RM/8016/M/80	16	80	M5	6	M/50/LSU/5V	QM/33/016/22	C0K510405	C02250405	C02470405
RM/8016/M/100	16	100	M5	6	M/50/LSU/5V	QM/33/016/22	C0K510405	C02250405	C02470405
RM/8016/M/125	16	125	M5	6	M/50/LSU/5V	QM/33/016/22	C0K510405	C02250405	C02470405
RM/8016/M/160	16	160	M5	6	M/50/LSU/5V	QM/33/016/22	C0K510405	C02250405	C02470405
RM/8016/M/200	16	200	M5	6	M/50/LSU/5V	QM/33/016/22	C0K510405	C02250405	C02470405
RM/8020/M/10	20	10	G1/8	8	M/50/LSU/5V	–	C0K510618	C02250618	C02470618
RM/8020/M/25	20	25	G1/8	8	M/50/LSU/5V	QM/33/020/22	C0K510618	C02250618	C02470618
RM/8020/M/40	20	40	G1/8	8	M/50/LSU/5V	QM/33/020/22	C0K510618	C02250618	C02470618
RM/8020/M/50	20	50	G1/8	8	M/50/LSU/5V	QM/33/020/22	C0K510618	C02250618	C02470618
RM/8020/M/80	20	80	G1/8	8	M/50/LSU/5V	QM/33/020/22	C0K510618	C02250618	C02470618
RM/8020/M/100	20	100	G1/8	8	M/50/LSU/5V	QM/33/020/22	C0K510618	C02250618	C02470618
RM/8020/M/125	20	125	G1/8	8	M/50/LSU/5V	QM/33/020/22	C0K510618	C02250618	C02470618
RM/8020/M/160	20	160	G1/8	8	M/50/LSU/5V	QM/33/020/22	C0K510618	C02250618	C02470618
RM/8020/M/200	20	200	G1/8	8	M/50/LSU/5V	QM/33/020/22	C0K510618	C02250618	C02470618
RM/8020/M/250	20	250	G1/8	8	M/50/LSU/5V	QM/33/020/22	C0K510618	C02250618	C02470618
RM/8025/M/10	25	10	G1/8	10	M/50/LSU/5V	–	C0K510618	C02250618	C02470618
RM/8025/M/25	25	25	G1/8	10	M/50/LSU/5V	QM/33/025/22	C0K510618	C02250618	C02470618
RM/8025/M/40	25	40	G1/8	10	M/50/LSU/5V	QM/33/025/22	C0K510618	C02250618	C02470618
RM/8025/M/50	25	50	G1/8	10	M/50/LSU/5V	QM/33/025/22	C0K510618	C02250618	C02470618
RM/8025/M/80	25	80	G1/8	10	M/50/LSU/5V	QM/33/025/22	C0K510618	C02250618	C02470618
RM/8025/M/100	25	100	G1/8	10	M/50/LSU/5V	QM/33/025/22	C0K510618	C02250618	C02470618
RM/8025/M/125	25	125	G1/8	10	M/50/LSU/5V	QM/33/025/22	C0K510618	C02250618	C02470618
RM/8025/M/160	25	160	G1/8	10	M/50/LSU/5V	QM/33/025/22	C0K510618	C02250618	C02470618
RM/8025/M/200	25	200	G1/8	10	M/50/LSU/5V	QM/33/025/22	C0K510618	C02250618	C02470618
RM/8025/M/250	25	250	G1/8	10	M/50/LSU/5V	QM/33/025/22	C0K510618	C02250618	C02470618

Other stroke lengths available up to 500 mm maximum, please contact us.
Service kits are not available for this range of cylinders.
For information on alternative magnetic switches, please contact us.

For alternative fitting types, shapes or sizes, refer to our fittings section.

MOUNTINGS FOR ISO ROUNDLINE CYLINDERS

RM/8000/M Double acting

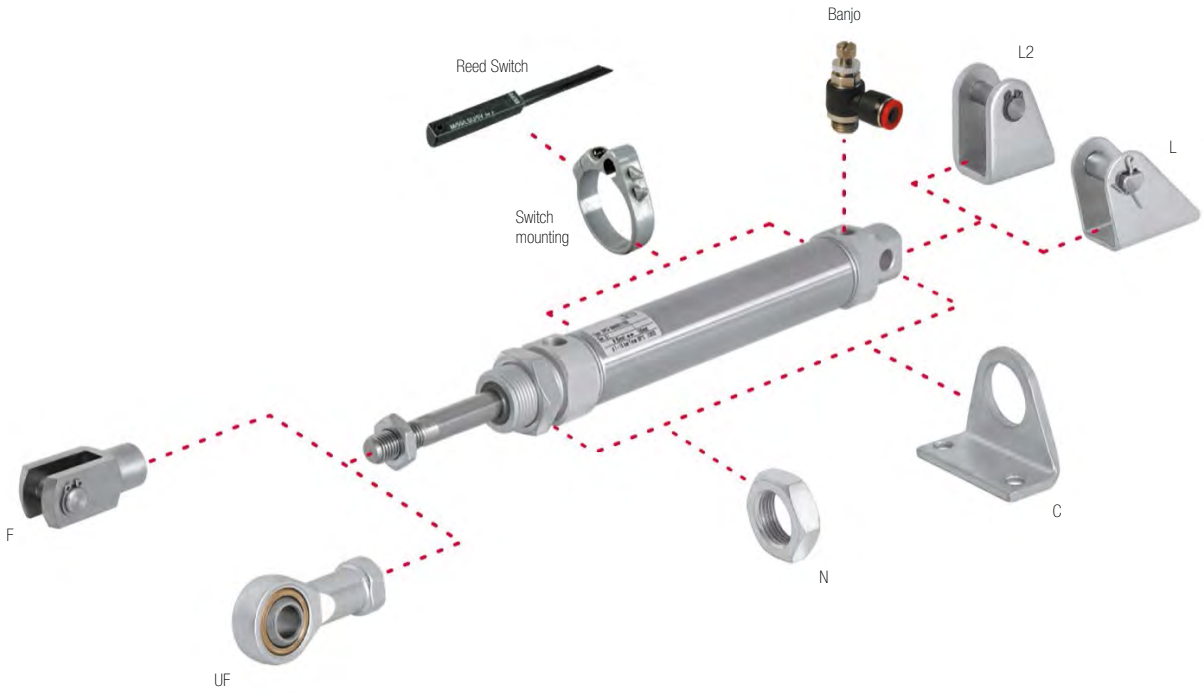

Dia. Ø	C	F	L	L2	N	UF
10	M/P19369	QM/8010/25	QM/947	QM/8010/44	M/P1501/90	QM/8010/32
12	M/P19389	QM/8012/25	QM/8012/24	QM/8012/44	M/P13834	QM/8012/32
16	M/P19389	QM/8012/25	QM/8012/24	QM/8012/44	M/P13834	QM/8012/32
20	M/P19406	QM/8020/25	QM/8020/24	QM/8020/44	M/P13615	QM/8020/32
25	M/P19406	QM/8025/25	QM/8020/24	QM/8020/44	M/P13615	QM/8025/32

Note: This actuator is supplied with one nose nut, an additional lock nut style 'N' is required when ordering mountings 'C' to connect to the rear end cap.

PRODUCT PLUS

Guide Block...

Guide blocks can be fitted to standard actuators to allow high axial loads to be applied to the end of the piston rod. They provide accurate piston rod guidance, come complete with centering sleeves and conform to ISO6432.

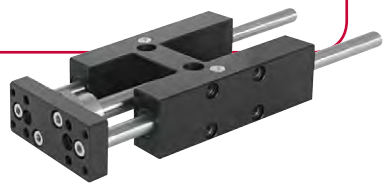

ROUNDLINE CYLINDERS

RT/57200/M Double acting – Ø 10 … 63 mm

- Saves 20% space over the basic length of a corresponding ISO/VDMA cylinder
- Low friction, long life seals
- High strength, double crimped end cap design
- Standard magnetic piston for full control system versatility

Technical Data

Medium:
Compressed air, filtered, lubricated or non-lubricated

Operation:
Double acting, buffer cushioning

Mounting:
Side port, integral eye mounting (Ø 10 … 40 mm), fixing holes in the end cover (Ø 50 and 63 mm)

Operating pressure:
1 … 10 bar

Ambient temperature:
-10°C … +80°C
Air supply must be dry enough to avoid ice formation at temperatures below +2°C

Dimensions

Ø 10 … 40 mm

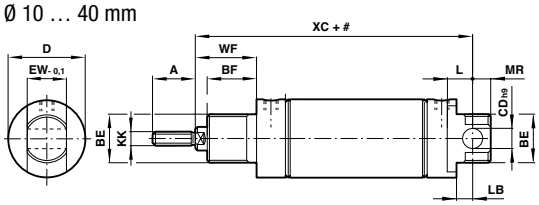

= Stroke

Ø 50 and 63 mm

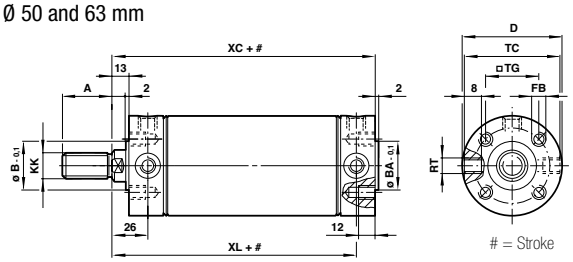

= Stroke

Ø 10 … 40 mm

Dia. Ø	A	BE	BF	Ø CD_{h9}	Ø D	$EW_{-0,1}$	KK	L	LB	MR	WF	XC
10	9	M10 x 1	8	4	15	8	M4	–	5	4	10	54
12	9	M10 x 1	8	4	15	8	M4	–	5	4	10	54
16	12	M12 x 1,25	10	5	17,5	10	M6	–	7	5	13,5	64,5
20	14	M16 x 1,5	12	6	22	12	M8	–	7	6	15,5	75,5
25	16	M18 x 1,5	12	8	26,5	14	M10 x 1,25	–	9	8	16,5	78,5
32	22	M22 x 1,5	15	8	33,5	16	M10 x 1,25	12	7	8	23	93
40	23	M30 x 1,5	15	10	41,5	20	M12 x 1,25	14	5	10	24	96

Ø 50 and 63 mm

Dia. Ø	A	Ø $B/BA_{-0,1}$	Ø D	FB	KK	RT	TC	TG	XC	XL
50	23	28	52,5	M 6	M 12 x 1,25	M 10 x 1	49	28,5	97	84
63	30	35	65,5	M 8	M 16 x 1,5	M 12 x 1,5	62	35,5	99	86

PRODUCT LINKS

Additional ranges...

Central rear port and side port flat end.
For more information call your Express Team

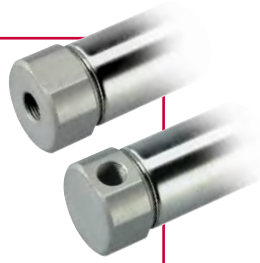

PRODUCT PLUS

Valves…

Despite their different bore sizes and stroke length, improvements in valve technology mean that only a 1/8" ported valve is required to operate this entire range of actuators. Look to our V60 series on page 79 for more information for the simplest solution, or speak to your Express team if you have more complex requirements

ROUNDLINE CYLINDERS

RT/57200/M Double acting – Ø 10 … 63 mm

Models / Accessories

Model	Dia. Ø	Stroke length	Port size	Piston rod Ø	Reed switch with integral 5 m cable	Switch mounting ≥15 mm stroke	Banjo flow control	Straight fitting	Elbow fitting
									
RT/57210/M/10	10	10	M5	4	M/50/LSU/5V	–	C0K510405	C02250405	C02470405
RT/57210/M/25	10	25	M5	4	M/50/LSU/5V	QM/33/010/22	C0K510405	C02250405	C02470405
RT/57210/M/40	10	40	M5	4	M/50/LSU/5V	QM/33/010/22	C0K510405	C02250405	C02470405
RT/57210/M/50	10	50	M5	4	M/50/LSU/5V	QM/33/010/22	C0K510405	C02250405	C02470405
RT/57212/M/10	12	10	M5	4	M/50/LSU/5V	–	C0K510405	C02250405	C02470405
RT/57212/M/25	12	25	M5	4	M/50/LSU/5V	QM/33/012/22	C0K510405	C02250405	C02470405
RT/57212/M/40	12	40	M5	4	M/50/LSU/5V	QM/33/012/22	C0K510405	C02250405	C02470405
RT/57212/M/50	12	50	M5	4	M/50/LSU/5V	QM/33/012/22	C0K510405	C02250405	C02470405
RT/57216/M/10	16	10	M5	6	M/50/LSU/5V	–	C0K510405	C02250405	C02470405
RT/57216/M/25	16	25	M5	6	M/50/LSU/5V	QM/33/016/22	C0K510405	C02250405	C02470405
RT/57216/M/40	16	40	M5	6	M/50/LSU/5V	QM/33/016/22	C0K510405	C02250405	C02470405
RT/57216/M/50	16	50	M5	6	M/50/LSU/5V	QM/33/016/22	C0K510405	C02250405	C02470405
RT/57216/M/80	16	80	M5	6	M/50/LSU/5V	QM/33/016/22	C0K510405	C02250405	C02470405
RT/57220/M/10	20	10	Rc 1/8	8	M/50/LSU/5V	–	C0TA00618	C01250618	C01470618
RT/57220/M/25	20	25	Rc 1/8	8	M/50/LSU/5V	QM/33/020/22	C0TA00618	C01250618	C01470618
RT/57220/M/40	20	40	Rc 1/8	8	M/50/LSU/5V	QM/33/020/22	C0TA00618	C01250618	C01470618
RT/57220/M/50	20	50	Rc 1/8	8	M/50/LSU/5V	QM/33/020/22	C0TA00618	C01250618	C01470618
RT/57220/M/80	20	80	Rc 1/8	8	M/50/LSU/5V	QM/33/020/22	C0TA00618	C01250618	C01470618
RT/57220/M/100	20	100	Rc 1/8	8	M/50/LSU/5V	QM/33/020/22	C0TA00618	C01250618	C01470618
RT/57225/M/10	25	10	Rc 1/8	10	M/50/LSU/5V	–	C0TA00618	C01250618	C01470618
RT/57225/M/25	25	25	Rc 1/8	10	M/50/LSU/5V	QM/33/025/22	C0TA00618	C01250618	C01470618
RT/57225/M/40	25	40	Rc 1/8	10	M/50/LSU/5V	QM/33/025/22	C0TA00618	C01250618	C01470618
RT/57225/M/50	25	50	Rc 1/8	10	M/50/LSU/5V	QM/33/025/22	C0TA00618	C01250618	C01470618
RT/57225/M/80	25	80	Rc 1/8	10	M/50/LSU/5V	QM/33/025/22	C0TA00618	C01250618	C01470618
RT/57225/M/100	25	100	Rc 1/8	10	M/50/LSU/5V	QM/33/025/22	C0TA00618	C01250618	C01470618
RT/57225/M/125	25	125	Rc 1/8	10	M/50/LSU/5V	QM/33/025/22	C0TA00618	C01250618	C01470618
RT/57225/M/160	25	160	Rc 1/8	10	M/50/LSU/5V	QM/33/025/22	C0TA00618	C01250618	C01470618
RT/57225/M/200	25	200	Rc 1/8	10	M/50/LSU/5V	QM/33/025/22	C0TA00618	C01250618	C01470618
RT/57232/M/10	32	10	Rc 1/8	12	M/50/LSU/5V	QM/33/032/22	C0TA00618	C01250618	C01470618
RT/57232/M/25	32	25	Rc 1/8	12	M/50/LSU/5V	QM/33/032/22	C0TA00618	C01250618	C01470618
RT/57232/M/40	32	40	Rc 1/8	12	M/50/LSU/5V	QM/33/032/22	C0TA00618	C01250618	C01470618
RT/57232/M/50	32	50	Rc 1/8	12	M/50/LSU/5V	QM/33/032/22	C0TA00618	C01250618	C01470618
RT/57232/M/80	32	80	Rc 1/8	12	M/50/LSU/5V	QM/33/032/22	C0TA00618	C01250618	C01470618
RT/57232/M/100	32	100	Rc 1/8	12	M/50/LSU/5V	QM/33/032/22	C0TA00618	C01250618	C01470618
RT/57232/M/125	32	125	Rc 1/8	12	M/50/LSU/5V	QM/33/032/22	C0TA00618	C01250618	C01470618
RT/57232/M/160	32	160	Rc 1/8	12	M/50/LSU/5V	QM/33/032/22	C0TA00618	C01250618	C01470618
RT/57232/M/200	32	200	Rc 1/8	12	M/50/LSU/5V	QM/33/032/22	C0TA00618	C01250618	C01470618
RT/57232/M/250	32	250	Rc 1/8	12	M/50/LSU/5V	QM/33/032/22	C0TA00618	C01250618	C01470618
RT/57240/M/25	40	25	Rc 1/8	14	M/50/LSU/5V	QM/33/040/22	C0TA00618	C01250618	C01470618
RT/57240/M/40	40	40	Rc 1/8	14	M/50/LSU/5V	QM/33/040/22	C0TA00618	C01250618	C01470618
RT/57240/M/50	40	50	Rc 1/8	14	M/50/LSU/5V	QM/33/040/22	C0TA00618	C01250618	C01470618
RT/57240/M/80	40	80	Rc 1/8	14	M/50/LSU/5V	QM/33/040/22	C0TA00618	C01250618	C01470618
RT/57240/M/100	40	100	Rc 1/8	14	M/50/LSU/5V	QM/33/040/22	C0TA00618	C01250618	C01470618
RT/57240/M/125	40	125	Rc 1/8	14	M/50/LSU/5V	QM/33/040/22	C0TA00618	C01250618	C01470618
RT/57240/M/160	40	160	Rc 1/8	14	M/50/LSU/5V	QM/33/040/22	C0TA00618	C01250618	C01470618
RT/57240/M/200	40	200	Rc 1/8	14	M/50/LSU/5V	QM/33/040/22	C0TA00618	C01250618	C01470618
RT/57240/M/320	40	320	Rc 1/8	14	M/50/LSU/5V	QM/33/040/22	C0TA00618	C01250618	C01470618
RT/57250/M/50	50	50	Rc 1/4	16	M/50/LSU/5V	QM/33/050/22	C0TA00828	C01250828	C01470828
RT/57250/M/80	50	80	Rc 1/4	16	M/50/LSU/5V	QM/33/050/22	C0TA00828	C01250828	C01470828
RT/57250/M/100	50	100	Rc 1/4	16	M/50/LSU/5V	QM/33/050/22	C0TA00828	C01250828	C01470828
RT/57250/M/125	50	125	Rc 1/4	16	M/50/LSU/5V	QM/33/050/22	C0TA00828	C01250828	C01470828
RT/57250/M/160	50	160	Rc 1/4	16	M/50/LSU/5V	QM/33/050/22	C0TA00828	C01250828	C01470828
RT/57250/M/200	50	200	Rc 1/4	16	M/50/LSU/5V	QM/33/050/22	C0TA00828	C01250828	C01470828
RT/57250/M/250	50	250	Rc 1/4	16	M/50/LSU/5V	QM/33/050/22	C0TA00828	C01250828	C01470828
RT/57263/M/50	63	50	Rc 1/4	20	M/50/LSU/5V	QM/33/063/22	C0TA00828	C01250828	C01470828
RT/57263/M/80	63	80	Rc 1/4	20	M/50/LSU/5V	QM/33/063/22	C0TA00828	C01250828	C01470828
RT/57263/M/100	63	100	Rc 1/4	20	M/50/LSU/5V	QM/33/063/22	C0TA00828	C01250828	C01470828
RT/57263/M/125	63	125	Rc 1/4	20	M/50/LSU/5V	QM/33/063/22	C0TA00828	C01250828	C01470828
RT/57263/M/160	63	160	Rc 1/4	20	M/50/LSU/5V	QM/33/063/22	C0TA00828	C01250828	C01470828

Other bore sizes and stroke lengths available up to 500 mm maximum, please contact us.
Service kits are not available for this range of cylinders.
For information on alternative magnetic switches, please contact us.

For alternative fitting types, shapes or sizes, refer to our fittings section.

MOUNTINGS FOR ROUNDLINE CYLINDERS

RT/57200/M Double acting

Ø 10 … 40 mm

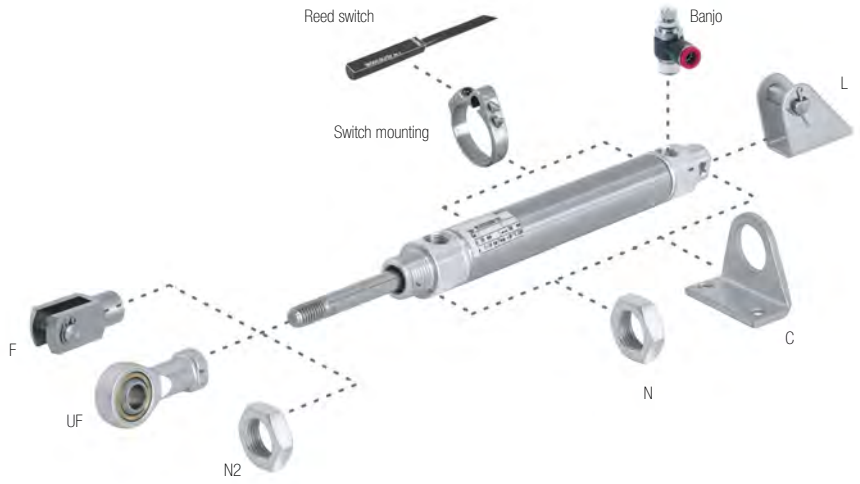

Ø 50 … 63 mm

Dia. Ø	C	F	N	N2	UF
10	M/P71273/2	QM/8010/25	M/P71364	M/P1501/80	QM/8010/32
12	M/P71273/2	QM/8010/25	M/P71364	M/P1501/80	QM/8010/32
16	M/P19369	QM/57016/25	M/P1501/90	M/P1501/79	QM/8012/32
20	M/P19389	QM/57020/25	M/P13834	M/P1501/60	QM/8020/32
25	M/P40381	QM/57025/25	M/P13607	M/P1501/89	QM/8025/32
32	M/P19406	QM/57032/25	M/P13615	M/P1501/89	QM/8025/32
40	M/P71273/3	QM/57040/25	M/P29254	M/P1501/90	QM/8040/32
50	QM/57050/21	QM/57040/25	–	M/P1501/90	QM/8040/32
63	QM/57063/21	QM/57063/25	–	M/P1501/91	QM/8050/32

simple to complex applications covered in one range

Integral switch Grooves

ISO Compact cylinders

Multi-position And tandem versions

Guided

ISO 21287 is the most recently-added actuator standard.

These compact cylinders are perfect for high force/short stroke applications where space is at a premium. Not just meeting the standard for compliance, but exceeding it, this range of actuators includes many unique technical variants:

- Sleek, anodised aluminium profile barrel housing switch mounting grooves (standard IMI Norgren M/50 switch) coupled with pressure die cast end caps for pleasing appearance
- Wide range of standard bore and stroke combinations from stock with male or female piston rod thread, plus non-standard stroke length units on fast availability
- Accepts standard ISO/VDMA mounting brackets, and is also available in non-rotating versions, linear slide version, with heavy duty wiper seal, tandem and multi-position versions, and also can accept guide block assembly

Engineering GREAT Solutions

Find out more
www.imi-precision.com

IMI NORGREN

ISO COMPACT CYLINDERS

RA/192000/MX Double acting, ISO 21287 – Ø 20 … 50 mm

- Conforms to ISO 21287
- Up to 30% shorter than full ISO/VDMA actuators
- Uses standard ISO/VDMA mountings

Technical Data

Medium:
Compressed air, filtered, lubricated or non-lubricated

Operation:
RA/192000/MX
Double acting, magnetic piston, female piston rod thread, buffer cushioning

Operating pressure:
1 … 10 bar

Ambient temperature:
-5°C … +80°C max.
Air supply must be dry enough to avoid ice formation at temperatures below +2°C

Dimensions

RA/192000/MX Standard cylinder
With female piston rod thread

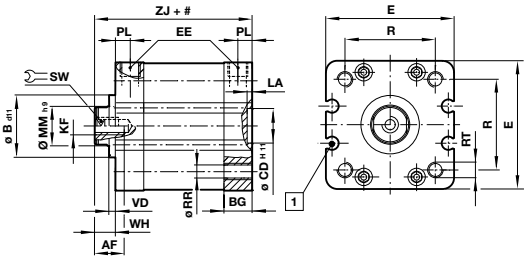

Stroke
1 M/50 switches can be mounted flush with the profile

Model	Ø	AF	Ø B d11	BG	Ø CD H11	□ E	EE	KF	LA	Ø MM h9
RA/192020/MX	20	10	–	12	10	37	M 5	M6	2,5	10
RA/192025/MX	25	10	–	13	10	41	M 5	M6	2,5	10
RA/192032/MX	32	12	–	14,5	14	48	G 1/8	M8	2,5	12
RA/192040/MX	40	12	–	14,5	14	54,5	G 1/8	M8	2,5	16
RA/192050/MX	50	16	–	14	18	66	G 1/8	M10	2,5	20

Ø	PL	□ R	Ø RR	RT	SW	WH	ZJ	kg at 0 mm	kg per 5 mm
20	7	22	4,3	M5	8	6	43	0,12	0,01
25	7	26	4,3	M5	8	6	45	0,15	0,01
32	7,5	32,5	5,3	M6	10	7	51	0,23	0,02
40	7,5	38	5,3	M6	13	7	52	0,30	0,02
50	7,5	46,5	6,8	M8	17	8	53	0,46	0,03

ISO COMPACT CYLINDERS

RA/192000/MX Double acting, ISO 21287 – Ø 20 … 50 mm

Models					Accessories				
Female thread	Dia. Ø	Stroke length	Port size	Piston rod Ø	Reed switch with integral 5 m cable	Banjo flow control	Straight fitting	Elbow fitting	Service Kit
									
RA/192020/MX/10	20	10	M5	10	M/50/LSU/5V	C0K510405	C02250405	C02470405	QM/192020/00
RA/192020/MX/15	20	15	M5	10	M/50/LSU/5V	C0K510405	C02250405	C02470405	QM/192020/00
RA/192020/MX/20	20	20	M5	10	M/50/LSU/5V	C0K510405	C02250405	C02470405	QM/192020/00
RA/192020/MX/25	20	25	M5	10	M/50/LSU/5V	C0K510405	C02250405	C02470405	QM/192020/00
RA/192020/MX/30	20	30	M5	10	M/50/LSU/5V	C0K510405	C02250405	C02470405	QM/192020/00
RA/192020/MX/40	20	40	M5	10	M/50/LSU/5V	C0K510405	C02250405	C02470405	QM/192020/00
RA/192020/MX/50	20	50	M5	10	M/50/LSU/5V	C0K510405	C02250405	C02470405	QM/192020/00
RA/192025/MX/10	25	10	M5	10	M/50/LSU/5V	C0K510405	C02250405	C02470405	QM/192025/00
RA/192025/MX/15	25	15	M5	10	M/50/LSU/5V	C0K510405	C02250405	C02470405	QM/192025/00
RA/192025/MX/20	25	20	M5	10	M/50/LSU/5V	C0K510405	C02250405	C02470405	QM/192025/00
RA/192025/MX/25	25	25	M5	10	M/50/LSU/5V	C0K510405	C02250405	C02470405	QM/192025/00
RA/192025/MX/30	25	30	M5	10	M/50/LSU/5V	C0K510405	C02250405	C02470405	QM/192025/00
RA/192025/MX/40	25	40	M5	10	M/50/LSU/5V	C0K510405	C02250405	C02470405	QM/192025/00
RA/192025/MX/50	25	50	M5	10	M/50/LSU/5V	C0K510405	C02250405	C02470405	QM/192025/00
RA/192032/MX/10	32	10	G1/8	12	M/50/LSU/5V	C0K510618	C02250618	C02470618	QM/192032/00
RA/192032/MX/15	32	15	G1/8	12	M/50/LSU/5V	C0K510618	C02250618	C02470618	QM/192032/00
RA/192032/MX/20	32	20	G1/8	12	M/50/LSU/5V	C0K510618	C02250618	C02470618	QM/192032/00
RA/192032/MX/25	32	25	G1/8	12	M/50/LSU/5V	C0K510618	C02250618	C02470618	QM/192032/00
RA/192032/MX/30	32	30	G1/8	12	M/50/LSU/5V	C0K510618	C02250618	C02470618	QM/192032/00
RA/192032/MX/40	32	40	G1/8	12	M/50/LSU/5V	C0K510618	C02250618	C02470618	QM/192032/00
RA/192032/MX/50	32	50	G1/8	12	M/50/LSU/5V	C0K510618	C02250618	C02470618	QM/192032/00
RA/192032/MX/60	32	60	G1/8	12	M/50/LSU/5V	C0K510618	C02250618	C02470618	QM/192032/00
RA/192032/MX/80	32	80	G1/8	12	M/50/LSU/5V	C0K510618	C02250618	C02470618	QM/192032/00
RA/192032/MX/100	32	100	G1/8	12	M/50/LSU/5V	C0K510618	C02250618	C02470618	QM/192032/00
RA/192040/MX/10	40	10	G1/8	16	M/50/LSU/5V	C0K510618	C02250618	C02470618	QM/192040/00
RA/192040/MX/15	40	15	G1/8	16	M/50/LSU/5V	C0K510618	C02250618	C02470618	QM/192040/00
RA/192040/MX/20	40	20	G1/8	16	M/50/LSU/5V	C0K510618	C02250618	C02470618	QM/192040/00
RA/192040/MX/25	40	25	G1/8	16	M/50/LSU/5V	C0K510618	C02250618	C02470618	QM/192040/00
RA/192040/MX/30	40	30	G1/8	16	M/50/LSU/5V	C0K510618	C02250618	C02470618	QM/192040/00
RA/192040/MX/40	40	40	G1/8	16	M/50/LSU/5V	C0K510618	C02250618	C02470618	QM/192040/00
RA/192040/MX/50	40	50	G1/8	16	M/50/LSU/5V	C0K510618	C02250618	C02470618	QM/192040/00
RA/192040/MX/60	40	60	G1/8	16	M/50/LSU/5V	C0K510618	C02250618	C02470618	QM/192040/00
RA/192040/MX/80	40	80	G1/8	16	M/50/LSU/5V	C0K510618	C02250618	C02470618	QM/192040/00
RA/192040/MX/100	40	100	G1/8	16	M/50/LSU/5V	C0K510618	C02250618	C02470618	QM/192040/00
RA/192050/MX/10	50	10	G1/8	20	M/50/LSU/5V	C0K510618	C02250618	C02470618	QM/192050/00
RA/192050/MX/15	50	15	G1/8	20	M/50/LSU/5V	C0K510618	C02250618	C02470618	QM/192050/00
RA/192050/MX/20	50	20	G1/8	20	M/50/LSU/5V	C0K510618	C02250618	C02470618	QM/192050/00
RA/192050/MX/25	50	25	G1/8	20	M/50/LSU/5V	C0K510618	C02250618	C02470618	QM/192050/00
RA/192050/MX/30	50	30	G1/8	20	M/50/LSU/5V	C0K510618	C02250618	C02470618	QM/192050/00
RA/192050/MX/40	50	40	G1/8	20	M/50/LSU/5V	C0K510618	C02250618	C02470618	QM/192050/00
RA/192050/MX/50	50	50	G1/8	20	M/50/LSU/5V	C0K510618	C02250618	C02470618	QM/192050/00
RA/192050/MX/60	50	60	G1/8	20	M/50/LSU/5V	C0K510618	C02250618	C02470618	QM/192050/00
RA/192050/MX/80	50	80	G1/8	20	M/50/LSU/5V	C0K510618	C02250618	C02470618	QM/192050/00
RA/192050/MX/100	50	100	G1/8	20	M/50/LSU/5V	C0K510618	C02250618	C02470618	QM/192050/00

Other stroke lengths available up to 500 mm maximum, depending upon bore size, please contact us.
For information on alternative magnetic switches, please contact us.

For alternative fitting types, shapes or sizes, refer to our fittings section.

MOUNTINGS FOR ISO COMPACT CYLINDERS

RA/192000/MX Double acting

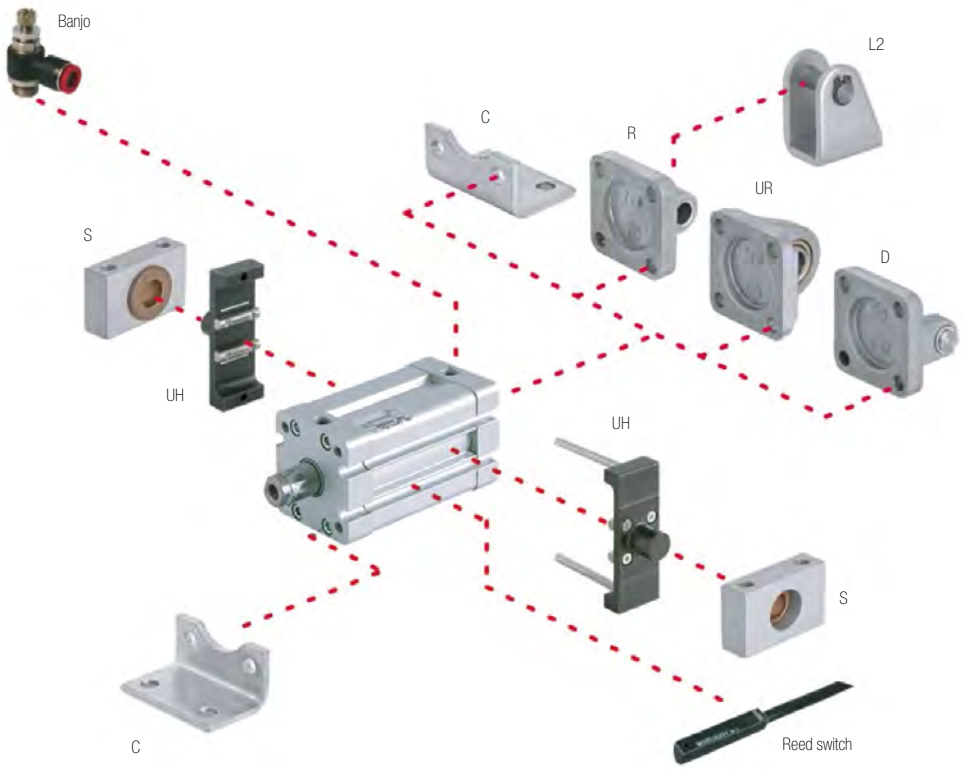

Dia. Ø	B, G	C	D	L2	R	S	UH	UR
20	QA/192020/22	QM/192020/21	–	QM/8020/44	QM/192020/27	–	–	–
25	QA/192025/22	QM/192025/21	–	QM/8020/44	QM/192025/27	–	–	–
32	QA/8032/22	QA/192032/21	QA/8032/23	–	QA/8032/27	QA/8032/41	PQA/182032/40	QA/8032/33
40	QA/8040/22	QA/192040/21	QA/8040/23	–	QA/8040/27	QA/8040/41	PQA/182040/40	QA/8040/33
50	QA/8050/22	QA/192050/21	QA/8050/23	–	QA/8050/27	QA/8040/41	PQA/182050/40	QA/8050/33

PRODUCT LINKS

Valves…

Despite their different bore sizes and stroke length, improvements in valve technology mean that only a 1/8" ported valve is required to operate this entire range of actuators. Look to our V60 series on page 79 for more information for the simplest solution, or speak to your Express team if you have more complex requirements

PRODUCT PLUS

Need a non-rotating piston rod?

We have three versions available including an externally mounted precision slide unit.

Please call your Express Team.

COMPACT CYLINDERS

RM/92000/M Double acting – Ø 12 … 100 mm

- One third the basic length of a corresponding ISO/VDMA model
- Low friction, long life seal design
- Fully non-corrodible specification
- Standard magnetic piston for full control system versatility

Technical Data

Medium:
Compressed air, filtered, lubricated or non-lubricated

Operation:
Double acting, magnetic piston non-cushioned

Operating pressure:
1 … 10 bar

Ambient temperature:
-5°C … +80°C
Air supply must be dry enough to avoid ice formation at temperatures below +2°C

Dimensions

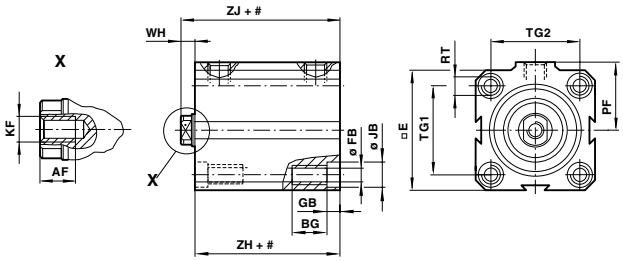

Dia. Ø	AF	BG	E	Ø FB	GB	Ø JB	KF	PF	RT	TG1	TG2	WH	ZH	ZJ
12	6	9	25	3,3	3,5	6	M 3	15	M 4	17	13	4,5	24	28,5
16	7	9	28	3,3	3,5	6	M 4	17	M 4	20	20	5,5	24,5	30
20	8	9	32	3,3	3,5	6	M 5	19,5	M 4	23	23	6	26	32
25	9	12	37	4,2	4,5	7,5	M 6	22	M 5	27	27	6,5	28,5	35
32	12	12	45	4,2	4,5	7,5	M 8	27,5	M 5	33	33	6,5	29	35,5
40	12	16	55	6,8	6,5	10,5	M 8	31,5	M 8	41	41	6,5	31,5	38
50	14	16	63	6,8	6,5	10,5	M 10	37	M 8	48	48	8	35	43
63	16	20	80	8,5	8,5	13,5	M 12	48	M 10	61	61	8	42,5	50,5
80	22	20	94	8,5	8,5	13,5	M 16	57	M 10	73	73	9	47	56
100	22	25	116,5	10,2	10,5	16,5	M 16	67	M 12	90,5	90,5	10	48,5	58,5

Models

Accessories

Model	Dia. Ø	Stroke length	Port size	Piston rod Ø	Reed switch with integral 5 m cable	Switch mounting	Banjo flow control	Straight fitting	Elbow fitting	Service kit
										
RM/92012/M/10	12	10	M5	6	M/50/LSU/5V	M/P72487B	C0K510405	C02250405	C02470405	–
RM/92012/M/15	12	15	M5	6	M/50/LSU/5V	M/P72487B	C0K510405	C02250405	C02470405	–
RM/92012/M/20	12	20	M5	6	M/50/LSU/5V	M/P72487B	C0K510405	C02250405	C02470405	–
RM/92012/M/25	12	25	M5	6	M/50/LSU/5V	M/P72487B	C0K510405	C02250405	C02470405	–
RM/92016/M/10	16	10	M5	8	M/50/LSU/5V	M/P72487B	C0K510405	C02250405	C02470405	–
RM/92016/M/15	16	15	M5	8	M/50/LSU/5V	M/P72487B	C0K510405	C02250405	C02470405	–
RM/92016/M/20	16	20	M5	8	M/50/LSU/5V	M/P72487B	C0K510405	C02250405	C02470405	–
RM/92016/M/25	16	25	M5	8	M/50/LSU/5V	M/P72487B	C0K510405	C02250405	C02470405	–
RM/92016/M/30	16	30	M5	8	M/50/LSU/5V	M/P72487B	C0K510405	C02250405	C02470405	–
RM/92020/M/10	20	10	M5	10	M/50/LSU/5V	M/P72487B	C0K510405	C02250405	C02470405	–
RM/92020/M/15	20	15	M5	10	M/50/LSU/5V	M/P72487B	C0K510405	C02250405	C02470405	–
RM/92020/M/20	20	20	M5	10	M/50/LSU/5V	M/P72487B	C0K510405	C02250405	C02470405	–
RM/92020/M/25	20	25	M5	10	M/50/LSU/5V	M/P72487B	C0K510405	C02250405	C02470405	–

Models / Accessories

Model	Dia. Ø	Stroke length	Port size	Piston rod Ø	Reed switch with integral 5 m cable	Switch mounting	Banjo flow control	Straight fitting	Elbow fitting	Service kit
RM/92020/M/30	20	30	M5	10	M/50/LSU/5V	M/P72487B	C0K510405	C02250405	C02470405	–
RM/92020/M/40	20	40	M5	10	M/50/LSU/5V	M/P72487B	C0K510405	C02250405	C02470405	–
RM/92020/M/50	20	50	M5	10	M/50/LSU/5V	M/P72487B	C0K510405	C02250405	C02470405	–
RM/92025/M/10	25	10	M5	12	M/50/LSU/5V	M/P72487B	C0K510405	C02250405	C02470405	–
RM/92025/M/15	25	15	M5	12	M/50/LSU/5V	M/P72487B	C0K510405	C02250405	C02470405	–
RM/92025/M/20	25	20	M5	12	M/50/LSU/5V	M/P72487B	C0K510405	C02250405	C02470405	–
RM/92025/M/25	25	25	M5	12	M/50/LSU/5V	M/P72487B	C0K510405	C02250405	C02470405	–
RM/92025/M/30	25	30	M5	12	M/50/LSU/5V	M/P72487B	C0K510405	C02250405	C02470405	–
RM/92025/M/40	25	40	M5	12	M/50/LSU/5V	M/P72487B	C0K510405	C02250405	C02470405	–
RM/92025/M/50	25	50	M5	12	M/50/LSU/5V	M/P72487B	C0K510405	C02250405	C02470405	–
RM/92032/M/10	32	10	G1/8	16	M/50/LSU/5V	M/P72487B	C0K510618	C02250618	C02470618	–
RM/92032/M/15	32	15	G1/8	16	M/50/LSU/5V	M/P72487B	C0K510618	C02250618	C02470618	–
RM/92032/M/20	32	20	G1/8	16	M/50/LSU/5V	M/P72487B	C0K510618	C02250618	C02470618	–
RM/92032/M/25	32	25	G1/8	16	M/50/LSU/5V	M/P72487B	C0K510618	C02250618	C02470618	–
RM/92032/M/30	32	30	G1/8	16	M/50/LSU/5V	M/P72487B	C0K510618	C02250618	C02470618	–
RM/92032/M/40	32	40	G1/8	16	M/50/LSU/5V	M/P72487B	C0K510618	C02250618	C02470618	–
RM/92032/M/50	32	50	G1/8	16	M/50/LSU/5V	M/P72487B	C0K510618	C02250618	C02470618	–
RM/92032/M/80	32	80	G1/8	16	M/50/LSU/5V	M/P72487B	C0K510618	C02250618	C02470618	–
RM/92040/M/10	40	10	G1/8	16	M/50/LSU/5V	M/P72487B	C0K510618	C02250618	C02470618	–
RM/92040/M/15	40	15	G1/8	16	M/50/LSU/5V	M/P72487B	C0K510618	C02250618	C02470618	–
RM/92040/M/20	40	20	G1/8	16	M/50/LSU/5V	M/P72487B	C0K510618	C02250618	C02470618	–
RM/92040/M/25	40	25	G1/8	16	M/50/LSU/5V	M/P72487B	C0K510618	C02250618	C02470618	–
RM/92040/M/30	40	30	G1/8	16	M/50/LSU/5V	M/P72487B	C0K510618	C02250618	C02470618	–
RM/92040/M/40	40	40	G1/8	16	M/50/LSU/5V	M/P72487B	C0K510618	C02250618	C02470618	–
RM/92040/M/50	40	50	G1/8	16	M/50/LSU/5V	M/P72487B	C0K510618	C02250618	C02470618	–
RM/92040/M/80	40	80	G1/8	16	M/50/LSU/5V	M/P72487B	C0K510618	C02250618	C02470618	–
RM/92050/M/10	50	10	G1/8	20	M/50/LSU/5V	M/P72487B	C0K510618	C02250618	C02470618	QM/92050/00
RM/92050/M/15	50	15	G1/8	20	M/50/LSU/5V	M/P72487B	C0K510618	C02250618	C02470618	QM/92050/00
RM/92050/M/20	50	20	G1/8	20	M/50/LSU/5V	M/P72487B	C0K510618	C02250618	C02470618	QM/92050/00
RM/92050/M/25	50	25	G1/8	20	M/50/LSU/5V	M/P72487B	C0K510618	C02250618	C02470618	QM/92050/00
RM/92050/M/30	50	30	G1/8	20	M/50/LSU/5V	M/P72487B	C0K510618	C02250618	C02470618	QM/92050/00
RM/92050/M/40	50	40	G1/8	20	M/50/LSU/5V	M/P72487B	C0K510618	C02250618	C02470618	QM/92050/00
RM/92050/M/50	50	50	G1/8	20	M/50/LSU/5V	M/P72487B	C0K510618	C02250618	C02470618	QM/92050/00
RM/92050/M/80	50	80	G1/8	20	M/50/LSU/5V	M/P72487B	C0K510618	C02250618	C02470618	QM/92050/00
RM/92050/M/100	50	100	G1/8	20	M/50/LSU/5V	M/P72487B	C0K510618	C02250618	C02470618	QM/92050/00
RM/92063/M/10	63	10	G1/4	20	M/50/LSU/5V	M/P72487B	C0K510628	C02250628	C02470628	QM/92063/00
RM/92063/M/25	63	25	G1/4	20	M/50/LSU/5V	M/P72487B	C0K510628	C02250628	C02470628	QM/92063/00
RM/92063/M/30	63	30	G1/4	20	M/50/LSU/5V	M/P72487B	C0K510628	C02250628	C02470628	QM/92063/00
RM/92063/M/40	63	40	G1/4	20	M/50/LSU/5V	M/P72487B	C0K510628	C02250628	C02470628	QM/92063/00
RM/92063/M/50	63	50	G1/4	20	M/50/LSU/5V	M/P72487B	C0K510628	C02250628	C02470628	QM/92063/00
RM/92063/M/80	63	80	G1/4	20	M/50/LSU/5V	M/P72487B	C0K510628	C02250628	C02470628	QM/92063/00
RM/92063/M/100	63	100	G1/4	20	M/50/LSU/5V	M/P72487B	C0K510628	C02250628	C02470628	QM/92063/00
RM/92080/M/25	80	25	G1/4	25	M/50/LSU/5V	M/P72487B	C0K510628	C02250628	C02470628	QM/92080/00
RM/92080/M/30	80	30	G1/4	25	M/50/LSU/5V	M/P72487B	C0K510628	C02250628	C02470628	QM/92080/00
RM/92080/M/40	80	40	G1/4	25	M/50/LSU/5V	M/P72487B	C0K510628	C02250628	C02470628	QM/92080/00
RM/92080/M/50	80	50	G1/4	25	M/50/LSU/5V	M/P72487B	C0K510628	C02250628	C02470628	QM/92080/00
RM/92080/M/80	80	80	G1/4	25	M/50/LSU/5V	M/P72487B	C0K510628	C02250628	C02470628	QM/92080/00
RM/92080/M/100	80	100	G1/4	25	M/50/LSU/5V	M/P72487B	C0K510628	C02250628	C02470628	QM/92080/00
RM/92100/M/25	100	25	G1/4	25	M/50/LSU/5V	M/P72487B	C0K510628	C02250628	C02470628	QM/92100/00
RM/92100/M/30	100	30	G1/4	25	M/50/LSU/5V	M/P72487B	C0K510628	C02250628	C02470628	QM/92100/00
RM/92100/M/40	100	40	G1/4	25	M/50/LSU/5V	M/P72487B	C0K510628	C02250628	C02470628	QM/92100/00
RM/92100/M/50	100	50	G1/4	25	M/50/LSU/5V	M/P72487B	C0K510628	C02250628	C02470628	QM/92100/00
RM/92100/M/80	100	80	G1/4	25	M/50/LSU/5V	M/P72487B	C0K510628	C02250628	C02470628	QM/92100/00
RM/92100/M/100	100	100	G1/4	25	M/50/LSU/5V	M/P72487B	C0K510628	C02250628	C02470628	QM/92100/00

Other stroke lengths available up to 300 mm maximum, please contact us.
For information on additional magnetic switches, please contact us.

For alternative fitting types, shapes or sizes, refer to our fittings section.

MOUNTINGS FOR COMPACT CYLINDERS

RM/92000/M Double acting

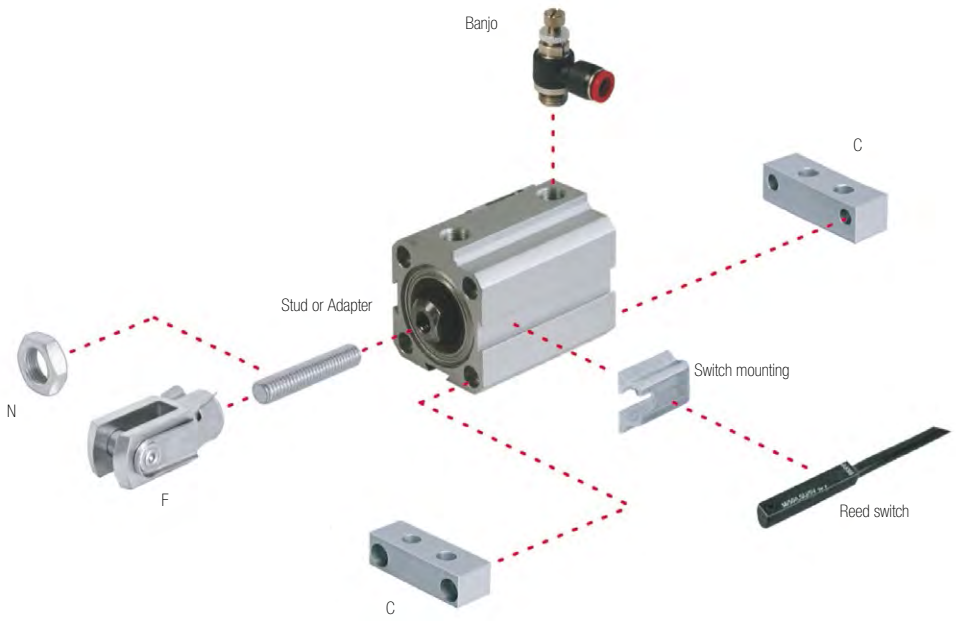

Dia. Ø	C	F	N	Stud or adaptor*
12	QM/90012/21	QM/57008/25	M/P1500/111	M/P1710/18
16	QM/90016/21	QM/8010/25	M/P1501/80	M/P1710/19
20	QM/90020/21	QM/92020/25	M/P1501/109	M/P1710/20
25	QM/90025/21	QM/57016/25	M/P1501/79	M/P1710/21
32	QM/90032/21	QM/57020/25	M/P1501/60	M/P1710/22
40	QM/90040/21	QM/57020/25	M/P1501/60	M/P1710/22
50	QM/90050/21	QM/57025/25	–	M/P71470/1
63	QM/90063/21	QM/57040/25	–	M/P71470/2
80	QM/90080/21	QM/57063/25	–	M/P71470/3
100	QM/90100/21	QM/57063/25	–	M/P71470/3

* For attaching F mounting to female piston rod thread.

PRODUCT LINKS

Valves…

Despite their different bore sizes and stroke length, improvements in valve technology mean that only a 1/8" ported valve is required to operate this entire range of actuators. Look to our V60 series on page 79 for more information for the simplest solution, or speak to your Express team if you have more complex requirements

PRODUCT PLUS

Need a non-rotating piston rod?

We have three versions available including an externally mounted precision slide unit.

Please call your Express Team.

From one supplier you have total availability of both standard and more specialised products meeting most industrial requirements

ISO/VDMA
range

IVAC – Integrated valve and actuator combined

Not all 'ISO/VDMA' actuators look alike and perform to a similar standard.

The range covers standard and specific use products, up to 320 mm bore and 2800 mm stroke length and up to 125mm bore features our new ACS - Adaptive Cushioning System.

What's more, IMI Precision Engineering were the first to utilise a flush-mounted switch system, now standard for almost ten years, which ensures that switches are fully protected from all kinds of mechanical damage.

- Very low static and dynamic friction characteristics allow low pressure working at speeds down to 3 mm/sec and for ultra-low friction applications a special version is available. Running costs can be optimised for maximum efficiency without use of special products, reducing cost of ownership and inventory holding.
- The vast IMI Norgren range includes both profile and traditional round barrel versions, a stainless steel version, heavy duty wiper and low friction options, non or extended cushion, integrated valve and actuator combined on one unit (IVAC), piston rod lock, guide block and unit complete with position sensor.

Engineering GREAT Solutions

Find out more
www.imi-precision.com

IMI NORGREN

For further information, visit **www.imi-precision.com** and use the new improved search function. If you cannot see the option you require please contact us.

IMI Precision Engineering

ISOLINE™ CYLINDER

PRA/802000/M, RA/802000/M, RA/8000/M Double acting - Ø 32 ... 320 mm

- Cylinder conforms to ISO 15552
- High performance adaptive cushioning system "ACS"
- 16 bar version available
- Flush mounted switch system with profile barrel

Technical Data

Medium:
Compressed air, filtered, lubricated or non-lubricated

Standard:
ISO 15552

Operation:
Double acting, magnetic piston with Ø 32 ... 125 mm ACS Cushioning system, Ø 160 ... 320 mm with adjustable cushioning

Operating pressure:
Ø 32 ... 125 mm (Profile barrel)
1 ... 12 bar
Ø 32 ... 200 mm (Round barrel)
1 ... 16 bar
Ø 250 & 320 mm (Round barrel)
1 ... 10 bar

Ambient temperature:
Ø 32 ... 125 mm
"Standard version"
-20 ... +80°C max.
Ø 160 ... 320 mm
"Standard version"
-10 ... +80°C max.
Air supply must be dry enough to avoid ice formation at temperatures below +2°C

Cylinder Ø (mm)	32	40	50	63	80	100	125	160	200	250	320
Profile barrel	•	•	•	•	•	•	•				
Round barrel	•	•	•	•	•	•	•	•	•	•	•
Port size	G1/8	G1/4	G1/4	G3/8	G3/8	G1/2	G1/2	G3/4	G3/4	G1	G1
Piston rod Ø (mm)	12	16	20	20	25	25	32	40	40	50	63
Piston rod thread	M10 x 1,25	M12 x 1,25	M16 x 1,5	M16 x 1,5	M20 x 1,5	M20 x 1,5	M27 x 2	M36 x 2	M36 x 2	M42 x 2	M48 x 2
Cushioning: Adaptive cushioning systems "ACS"	•	•	•	•	•	•	•				
Cushioning: Adjustabe cushioning								•	•	•	•

The function

The new "ACS" Adaptive Cushioning System provides a high performance pneumatic damping function. The system will automatically cushion for a wide range of general applications as delivered. Manual adjustment is still possible for extreme applications

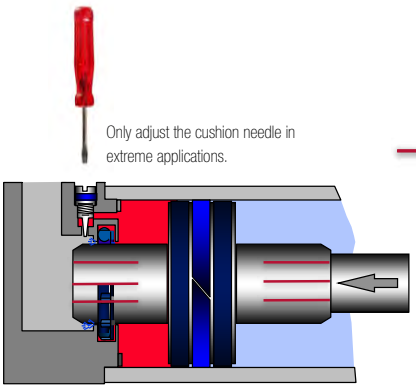

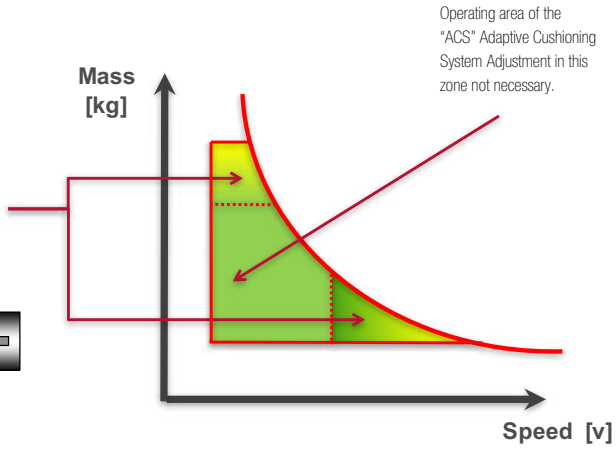

ISOLINE™ CYLINDER

PRA/802000/M, RA/802000/M, RA/8000/M Double acting - Ø 32 ... 320 mm

Models

Accessories

Model Profile barrel	Model Round barrel	Dia. Ø	Port size	Banjo flow control	Straight fitting	Elbow fitting	Reed switch with integral 5 m cable	Switch mounting*	Service Kit
									
PRA/802032/M/*	RA/802032/M/*	32	G1/8	C0K510618	C02250618	C02470618	M/50/LSU/5V	QM/27/2/1	QA/8032/00
PRA/802040/M/*	RA/802040/M/*	40	G1/4	C0K510628	C02250628	C02470628	M/50/LSU/5V	QM/27/2/1	QA/8040/00
PRA/802050/M/*	RA/802050/M/*	50	G1/4	C0K510828	C02250828	C02470828	M/50/LSU/5V	QM/27/2/1	QA/8050/00
PRA/802063/M/*	RA/802063/M/*	63	G3/8	C0K510838	C02250838	C02470838	M/50/LSU/5V	QM/27/2/1	QA/8063/00
PRA/802080/M/*	RA/802080/M/*	80	G3/8	C0K511038	C02251038	C02471038	M/50/LSU/5V	QM/27/2/1	QA/8080/00
PRA/802100/M/*	RA/802100/M/*	100	G1/2	C0K511248	C02251248	C02471248	M/50/LSU/5V	QM/27/2/1	QA/8100/00
PRA/802125/M/*	RA/802125/M/*	125	G1/2	C0K511248	C02251248	C02471248	M/50/LSU/5V	QM/27/2/1	QA/8125C/00
-	RA/8160/M/*	160	G3/4	M840 (Inline)	-	-	M/50/LSU/5V	QM/27/2/1	QA/8160D/00
-	RA/8200/M/*	200	G3/4	M840 (Inline)	-	-	M/50/LSU/5V	QM/27/2/1	QA/8200B/00
-	RA/8250/M/*	250	G1	M855 (Inline)	-	-	M/50/LSU/5V	QM/27/2/1	QA/8250/00
-	RA/8320/M/*	320	G1	M855 (Inline)	-	-	M/50/LSU/5V	QM/27/2/1	QA/8320/00

For alternative fitting types please contact the technical service.

* For use with round barrel

Standard strokes

Cylinder Ø (mm)	Stroke length (mm) 25	50	80	100	125	160	200	250	320	400	500
32	•	•	•	•	•	•	•	•	•	•	•
40	•	•	•	•	•	•	•	•	•	•	•
50	•	•	•	•	•	•	•	•	•	•	•
63	•	•	•	•	•	•	•	•	•	•	•
80	•	•	•	•	•	•	•	•	•	•	•
100	•	•	•	•	•	•	•	•	•	•	•
125	•	•	•	•	•	•	•	•	•	•	•
160	•	•	•	•	•	•	•	•	•	•	•
200	•	•	•	•	•	•	•	•	•	•	•
250	•	•	•	•	•	•	•	•	•	•	•
320	•	•	•	•	•	•	•	•	•	•	•

ISOLINE™ CYLINDER

PRA/802000/M, RA/802000/M, RA/8000/M Double acting - Ø 32 ... 320 mm

Dimensions

PRA/802000/M, RA/802000/M, RA/8000/M

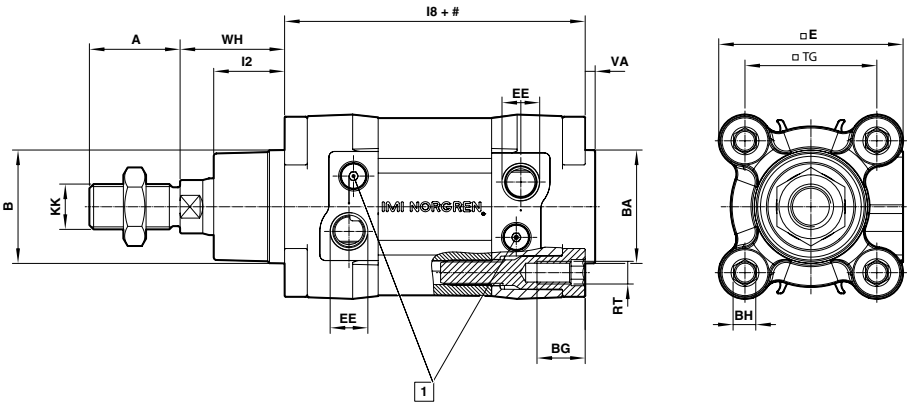

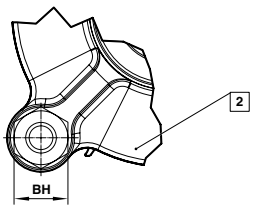

Stroke

1 Cushion screw

2 Ø 80 ... 320 mm

3 M/50 switches can be mounted flush with the profile

For additional information please contact the technical service or http://www.imi-precision.com

Model Profile barrel
Ø 32 ... 125 mm

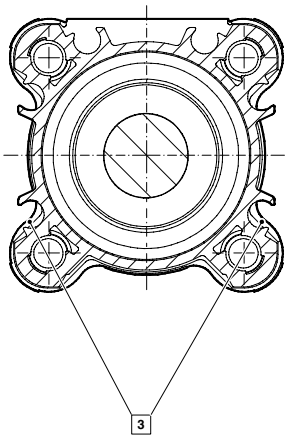

Model Round barrel
Ø 32 ... 125 mm

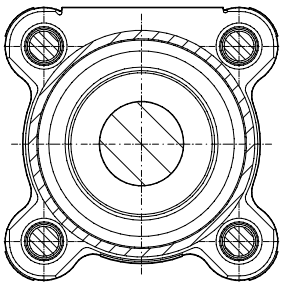

Model Round barrel
Ø 160 ... 320 mm

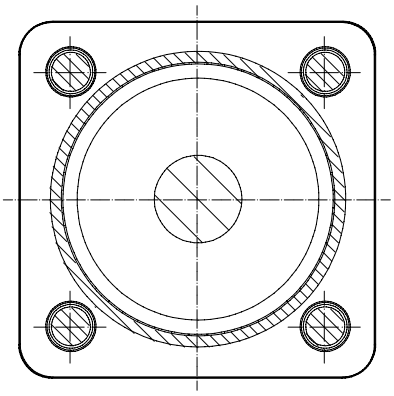

Ø	A -0,5	Ø B d11	Ø BA d11	BG min	BH	□E	EE	KK	L2	L8	□TG	RT	VA	WH
32	22	30	30	16	6	47	G1/8	M10 x 1,25	19,5	94	32,5	M 6	3,5	26
40	24	35	35	16	6	53	G1/4	M12 x 1,25	22	105	38	M 6	3,5	30
50	32	40	40	16	8	65	G1/4	M16 x 1,5	25	106	46,5	M 8	3,5	37
63	32	45	45	16	8	75	G3/8	M16 x 1,5	25	121	56,5	M 8	3,5	37
80	40	45	45	17	19	95	G3/8	M20 x 1,5	33	128	72	M 10	3,5	46
100	40	55	55	17	19	113	G1/2	M20 x 1,5	35	138	89	M 10	3,5	51
125	54	60	60	20	24	140	G1/2	M27 x 2	44	160	110	M 12	5,5	65
160	72	65	65	28,5	32	183,5	G3/4	M36 x 2	58	180	140	M 16	4	80
200	72	75	75	28,5	32	224	G3/4	M36 x 2	67	180	175	M 16	5	95
250	84	90	90	35	36	280	G1	M42 x 2	80	200	220	M 20	7	105
320	96	110	110	30	46	350	G1	M48 x 2	90	220	270	M 24	7	120

Mountings

Cylinder with Profile barrel Ø 32 ... 125 mm

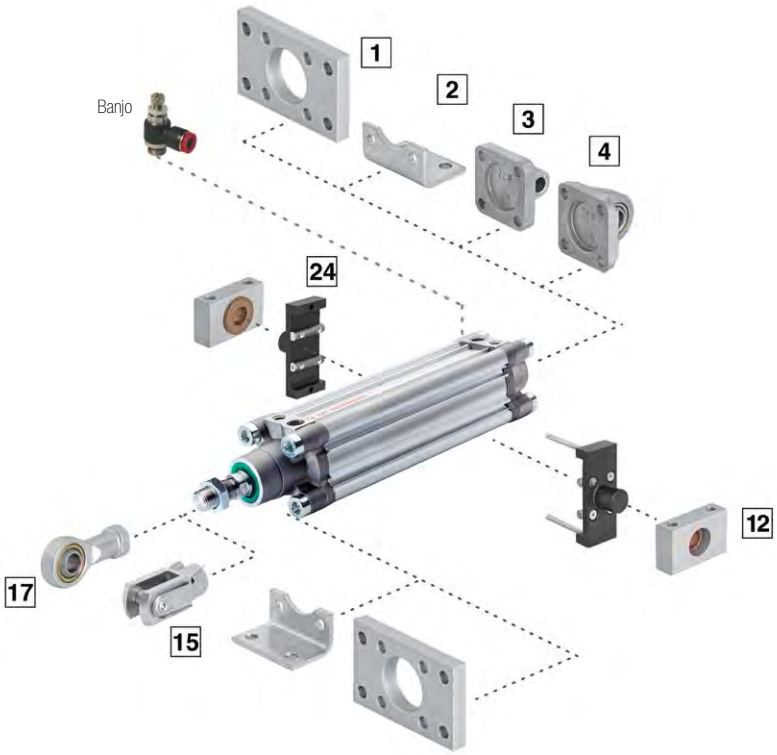

Model	B, G 1	C 2	D 5	F 15	UH 24
					
32	QA/8032/22	QA/8032/21	QA/8032/23	QM/8025/25	PQA/802032/40
40	QA/8040/22	QA/8040/21	QA/8040/23	QM/8040/25	PQA/802040/40
50	QA/8050/22	QA/8050/21	QA/8050/23	QM/8050/25	PQA/802050/40
63	QA/8063/22	QA/8063/21	QA/8063/23	QM/8050/25	PQA/802063/40
80	QA/8080/22	QA/8080/21	QA/8080/23	QM/8080/25	PQA/802080/40
100	QA/8100/22	QA/8100/21	QA/8100/23	QM/8080/25	PQA/802100/40
125	QM/8125/22	QM/8125/21	QM/8125/23	QM/8125/25	PQA/802125/40
160	QM/8160/22	QM/8160/21	QM/8160/23	QM/8160/25	-
200	QM/8200/22	QM/8200/21	QM/8200/23	QM/8160/25	-
250	QM/8250/22	QM/8250/21	QM/8250/23	QM/8250/25	-
320	QM/8320/22	QM/8320/21	QM/8320/23	QM/8320/25	-

ISOLINE™ CYLINDER

PRA/802000/M, RA/802000/M, RA/8000/M Double acting - Ø 32 ... 320 mm

Cylinder with Round barrel Ø 32 ... 320 mm

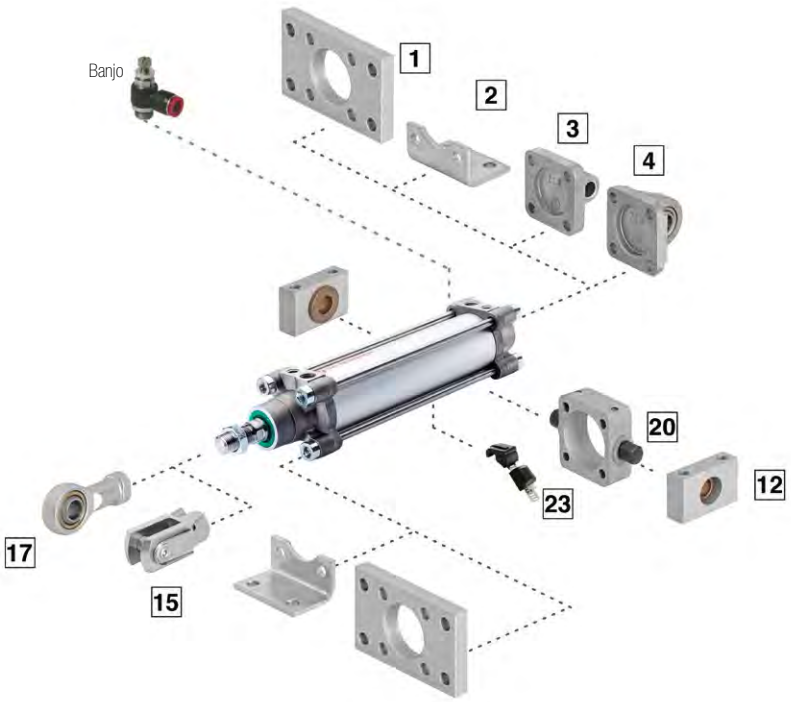

Ø	UH 20	S 12	UF 17	UR 4	R 3	23
						
32	QA/8032/40	QA/8032/41	QM/8025/32	QA/8032/33	QA/8032/27	QM/27/2/1
40	QA/8040/40	QA/8040/41	QM/8040/32	QA/8040/33	QA/8040/27	QM/27/2/1
50	QA/8050/40	QA/8040/41	QM/8050/32	QA/8050/33	QA/8050/27	QM/27/2/1
63	QA/8063/40	QA/8063/41	QM/8050/32	QA/8063/33	QA/8063/27	QM/27/2/1
80	QA/8080/40	QA/8063/41	QM/8080/32	QA/8080/33	QA/8080/27	QM/27/2/1
100	QA/8100/40	QA/8100/41	QM/8080/32	QA/8100/33	QA/8100/27	QM/27/2/1
125	QA/8125/40	QA/8100/41	QM/8125/32	QM/8125/33	QM/8125/27	QM/27/2/1
160	QA/8160/40	QA/8160/41	QM/8160/32	QM/8160/33	QM/8160/27	QM/27/2/1
200	QA/8200/40	QA/8160/41	QM/8160/32	QM/8200/33	QM/8200/27	QM/27/2/1
250	-	-	QM/8250/32	QM/8250/33	-	QM/27/2/1
320	-	-	QM/8320/32	QM/8320/33	-	QM/27/2/1

IVAC

Integrated Valve and Actuator Control

PRA/882000 Series

32 to 100mm bore – up to 1,000mm stroke length.

IMI Precision Engineering has worked closely with customers in key industry sectors to fully understand what improvements they wanted from their pneumatic controls. The response highlighted a widespread need for improved energy efficiency, reduced downtime and greater ease of use.

The IVAC from IMI Precision Engineering now answers these needs: A family of products incorporating proven technology, IVAC is a light weight, strong, actuator with integrated solenoid valve, cushion and speed control plus position sensors. The ISO/VDMA dimensions mean that it can be used to replace existing traditional systems, or used on new installations. Using IVAC rather than traditional components, energy consumption can be reduced by up to 50%. The unit has been rigorously tested in operational conditions by customers in a wide range of industries.

The unique patented design delivers significant benefits:

- Faster response times
- Fully modular design
- Integrated sensor adjustment
- Life expectancy of over 200 million cycles
- Cleanline body offers simple washdown when used in critical applications
- Integrated pressure protection

Engineering GREAT Solutions

Find out more
www.imi-precision.com

IMI NORGREN

For further information, visit **www.imi-precision.com** and use the new improved search function. If you cannot see the option you require please contact us.

IMI Precision Engineering

IVAC CLEAN LINE CYLINDER

PRA/882000/M Double acting – Ø 32 … 63 mm

- Complete functional unit with LED display
- Central electrical connector, polarity-safe
- Integrated 5/2 or 5/3 valve
- Additional output ports (2 & 4)
- Integrated flow regulator for speed control
- Integrated reed or solid state switches
- Protection class IP67, suitable for food andbeverage sector
- Energy efficient

Technical Data

Medium:
Compressed air, filtered, lubricated or non-lubricated
Particles size: Class 7, ISO 8573 – 1 (dated 2001)
Humidity and water content: Air supply must be dry.Corresponding of the application and working conditions the air must be dry enough to avoid condensate. The pressure dewpoint must be minimum 15° under the application and working conditions.
Oil: Class 4, ISO 8573 – 1 (dated 2001)

Standard:
Based on ISO 15552
(length, mounting pitch and thread dimensions according to ISO 15552. Some outside dimensions different to ISO 15552)

Operation:
Double acting, magnetic piston, adjustable cushioning

Operating pressure:
2 … 8 bar

Ambient temperature:
-2°C … +70°C max.
Air supply must be dry enough to avoid ice formation at temperatures below +2°C

Supply voltage:
24 V d.c.

Multipole connection:
M12 x 1 male, 8 pin

Power consumption:
1 W max

Rating:
100 % E.D

Dimensions

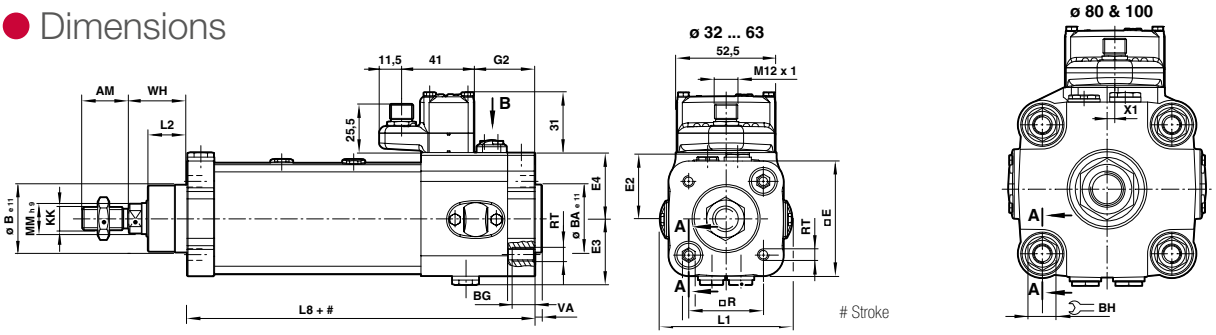

Dia. Ø	AM	Ø B e11	Ø BA e11	BG	BH	□ E	E2	E3	E4	G2	KK	L1	L2	L8	□ R	RT	VA	WH	X1
32	22	30	30	16	6	53	31	30,5	32	30,5	M10x1,25	68,5	20	94	32,5	M 6	3	26	0
40	24	35	35	16	6	60	34,5	34	34	30,5	M12x1,25	68,5	21	105	38	M 6	3,5	30	0
50	32	40	40	16	8	71,5	40	39	39	34,5	M16x1,5	92,5	28	106	46,5	M 8	3,5	37	1,5
63	32	45	45	16	8	82	46	45,5	45,5	38	M16x1,5	91,5	28	121	56,5	M 8	4	37	0

Models - With glandless spool

Accessories

Model	Dia. Ø	Port size	Piston rod Ø	Stroke lenght (mm)	Valve function	Actuation	Cylinder function	Plug with 5m moulded cable	Elbow fitting	Silencer
										
PRA/882032/MIB/M4/50	32	G1/8	12	50	5/2 bistable	Sol/Sol	not defind	M/P74582/5	C02470618	M/S1
PRA/882032/MIB/M4/80	32	G1/8	12	80	5/2 bistable	Sol/Sol	not defind	M/P74582/5	C02470618	M/S1
PRA/882032/MIB/M4/100	32	G1/8	12	10	5/2 bistable	Sol/Sol	not defind	M/P74582/5	C02470618	M/S1
PRA/882032/MIB/M4/160	32	G1/8	12	160	5/2 bistable	Sol/Sol	not defind	M/P74582/5	C02470618	M/S1
PRA/882040/MIB/M4/50	40	G1/8	16	50	5/2 bistable	Sol/Sol	not defind	M/P74582/5	C02470618	M/S1
PRA/882040/MIB/M4/80	40	G1/8	16	80	5/2 bistable	Sol/Sol	not defind	M/P74582/5	C02470618	M/S1
PRA/882040/MIB/M4/100	40	G1/8	16	100	5/2 bistable	Sol/Sol	not defind	M/P74582/5	C02470618	M/S1
PRA/882040/MIB/M4/200	40	G1/8	16	200	5/2 bistable	Sol/Sol	not defind	M/P74582/5	C02470618	M/S1
PRA/882050/MIB/M4/50	50	G1/8	20	50	5/2 bistable	Sol/Sol	not defind	M/P74582/5	C02470618	M/S1
PRA/882050/MIB/M4/80	50	G1/8	20	80	5/2 bistable	Sol/Sol	not defind	M/P74582/5	C02470618	M/S1
PRA/882050/MIB/M4/100	50	G1/8	20	100	5/2 bistable	Sol/Sol	not defind	M/P74582/5	C02470618	M/S1
PRA/882050/MIB/M4/200	50	G1/8	20	200	5/2 bistable	Sol/Sol	not defind	M/P74582/5	C02470618	M/S1
PRA/882063/MIB/M4/100	63	G1/4	20	100	5/2 bistable	Sol/Sol	not defind	M/P74582/5	C02470828	M/S2
PRA/882063/MIB/M4/160	63	G1/4	20	160	5/2 bistable	Sol/Sol	not defind	M/P74582/5	C02470828	M/S2
PRA/882063/MIB/M4/200	63	G1/4	20	200	5/2 bistable	Sol/Sol	not defind	M/P74582/5	C02470828	M/S2

Other stroke length available up to 1000 mm maximum, other variants available, please call our Technical Service.

For alternative fittings types, shapes or sizes, refer to our fitting section.

MOUNTINGS FOR IVAC CLEAN LINE CYLINDER

PRA/882000/M Double acting

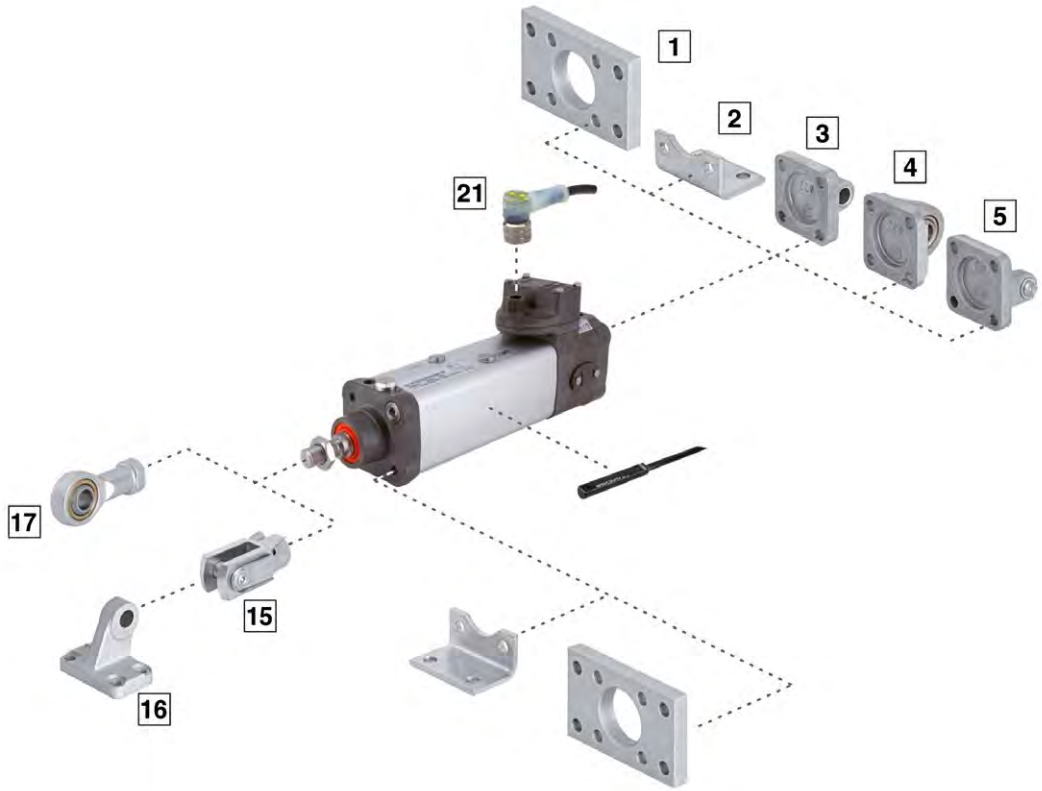

Cyl. Ø	B, G 1	C 2	D 5	F 15	R 3	UF 17	UR 4
							
32	QA/8032/22	QA/8032/21	QA/8032/23	QM/8025/25	QA/8032/27	QM/8025/32	QA/8032/33
40	QA/8040/22	QA/8040/21	QA/8040/23	QM/8040/25	QA/8040/27	QM/8040/32	QA/8040/33
50	QA/8050/22	QA/8050/21	QA/8050/23	QM/8050/25	QA/8050/27	QM/8050/32	QA/8050/33
63	QA/8063/22	QA/8063/21	QA/8063/23	QM/8050/25	QA/8063/27	QM/8050/32	QA/8063/33
80	QA/8080/22	QA/8080/21	QA/8080/23	QM/8080/25	QA/8080/27	QM/8080/32	QA/8080/33
100	QA/8100/22	QA/8100/21	QA/8100/23	QM/8080/25	QA/8100/27	QM/8080/32	QA/8100/33

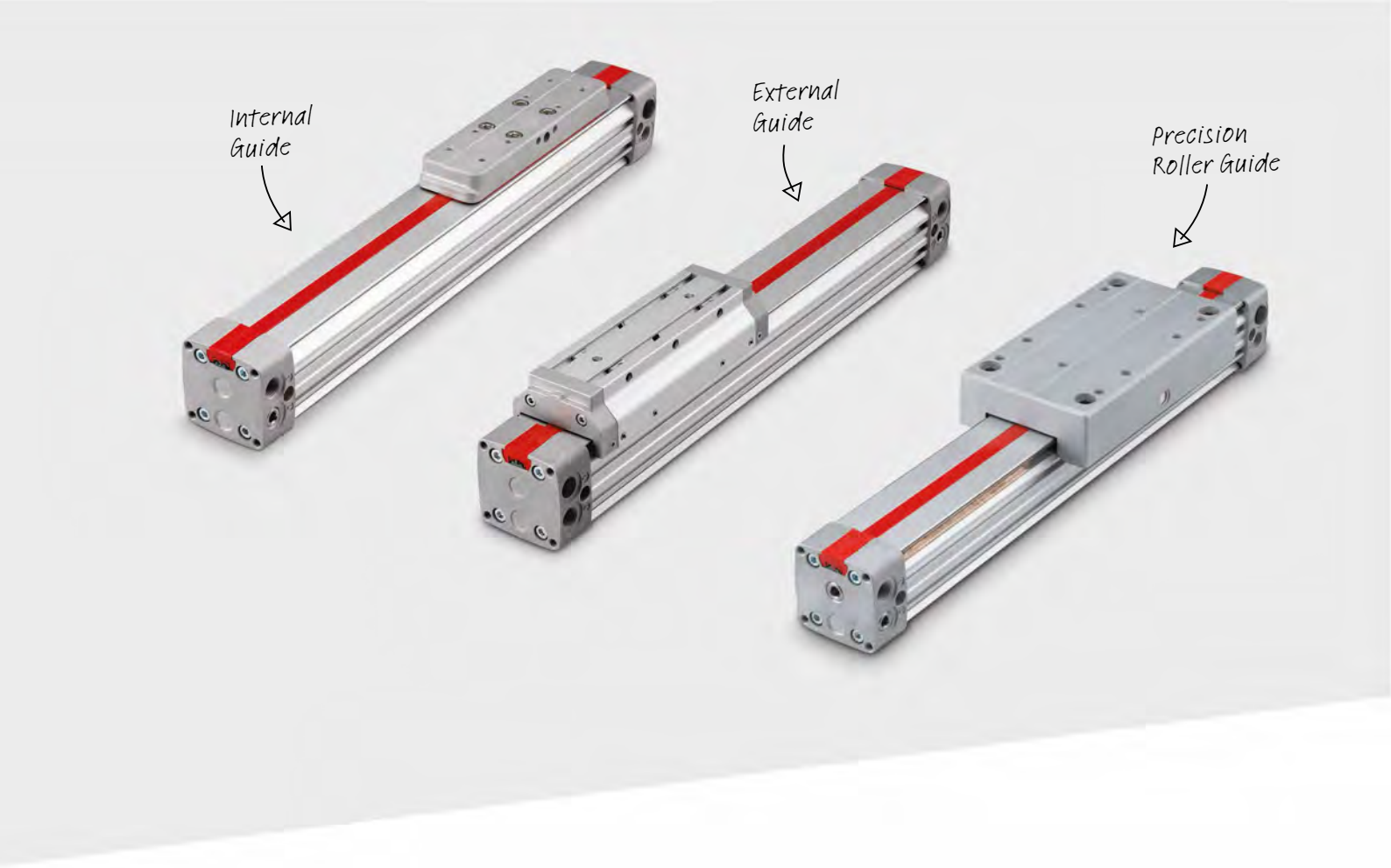

Lintra® Plus Range

M/146000 Internal Guide, M/146100 External Guide, M/146200 Precision Roller Guide

Double acting – Ø 16 … 80 mm

- Widest rodless range covers all requirements from lighter to heavier duties
- Unique integrated guides housed in the main extrusion
- Unique zip action sealing system
- Protection system preventing dust ingress
- Reliable operation up to 6,000 Km of travel
- Interchangeable with previous M/46*00 series units

Models

Internal guide	Piston Ø	Stroke length	Port size
M/146016/M/****	16	made to order	M5
M/146020/M/****	20	made to order	G1/8
M/146025/M/****	25	made to order	G1/8
M/146032/M/****	32	made to order	G1/4
M/146040/M/****	40	made to order	G1/4
M/146050/M/****	50	made to order	G3/8
M/146063/M/****	63	made to order	G1/2
M/146080/M/****	80	made to order	G1/2
External guide	**Piston Ø**	**Stroke length**	**Port size**
M/146116/M/****	16	made to order	M5
M/146120/M/****	20	made to order	G1/8
M/146125/M/****	25	made to order	G1/8
M/146132/M/****	32	made to order	G1/4
M/146140/M/****	40	made to order	G1/4
M/146150/M/****	50	made to order	G3/8
M/146163/M/****	63	made to order	G1/2
M/146180/M/****	80	made to order	G1/2
Precision roller guide	**Piston Ø**	**Stroke length**	**Port size**
M/146225/M/****	25	made to order	G1/8
M/146232/M/****	32	made to order	G1/4
M/146240/M/****	40	made to order	G1/4
M/146250/M/****	50	made to order	G3/8
M/146263/M/****	63	made to order	G1/2

**** Insert stroke length in mm – very best availability in multiples of 100 mm.

PRODUCT PLUS

IMI Precision Engineering offers rodless actuator in a whole series of bore and stroke combinations. Please, contact our Technical Service.

Engineering GREAT Solutions

IMI NORGREN

Find out more
www.imi-precision.com

AIR BELLOWS

M/31000 Single acting – Ø 6 … 16”

- Frictionless operation
- No maintenance or lubrication
- High vibration isolation level
- Simple to install

Technical Data

Medium:
Compressed air lubricated or unlubricated, Nitrogen, water (with glycol)

Operating pressure:
5,5 bar recommanded dynamic pressure 8 bar max.

Ambient temperature:
-40°C … +70°C “Static”
-30°C … +50°C “Dynamic”
When operated at this temperature (+70°C) for pro-longed periods, the bellow will experience a reduce working life.
Static = constant/unchanging external load
Dynamic = vibration or a changing internal pressure as a result of changing external load

Important instructions:

Thrust:
The thrust depends on the height of the bellow. When height increases - the thrust decreases.

- Before installing the air bellow, check it carefully for any damage it may have suffered from transport or improper storage.
- Do not inflate the air bellow until it has been secured properly.

Clearance:
There must be enough clearance around the air bellow.

- The full surface of the metal parts is to be used to bear the forces.
- Air bellows must be equipped with lateral guides.
- Deflate the air bellows fully before removing.
- Ensure that the bellows are not constantly in contact with hydraulic oil, lubricants, solvents, metal cuttings and welding sparks.
- Should the air bellow be subjected to special media in an application, ask IMI Precision Engineering for further information, specifying the medium, temperature and concentration.

Stops:
To avoid damage when the bellow is compressed or extended mechanical stops at both end positions have to be used.

Dimensions

M/31061 … M/31163

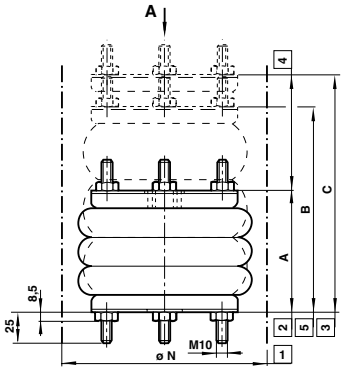

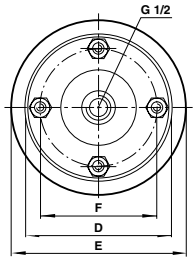

1 Installation diameter min.
2 Installation height min.
3 Installation height max.
4 Stroke
5 Recommended max. working height

Models	Norminal Ø (inch) x convolutions	Recommended max. working height B (mm)	Stroke (mm)	Installation height A min. (mm)	Installation height C max. (mm)	Max. torque for mounting studs (Nm)	Ø E	Ø D	Ø F	Ø N	Weight (kg)
M/31061	6 x 1	95	55	50	105	25	175	154	127	190	2,2
M/31062	6 x 2	170	115	75	190	25	175	154	127	190	2,7
M/31081	8 x 1	115	75	50	130	25	230	184	155	245	3
M/31082	8 x 2	220	175	75	250	25	230	184	155	245	3,7
M/31102	10 x 2	245	225	75	300	25	270	210	181	300	4,7
M/31103	10 x 3	350	330	100	430	25	270	210	181	300	5,2
M/31121	12 x 1	135	100	50	150	25	330	260	232	350	5,4
M/31122	12 x 2	245	225	75	300	25	330	260	232	350	6,2
M/31123	12 x 3	350	330	100	430	25	330	260	232	350	6,9
M/31141	14 1/2 x 1	150	100	50	150	25	400	310	282	425	7,1
M/31142	14 1/2 x 2	290	265	75	340	25	400	310	282	425	8,3
M/31143	14 1/2 x 3	420	380	100	480	25	400	310	282	425	9,6
M/31162	16 x 2	350	350	75	390	25	435	310	282	460	7,6
M/31163	16 x 3	475	430	120	550	25	435	310	282	460	10,4

COMPACT AIR BELLOWS

PM/31000 Single acting – Ø 2 3/4 … 12"

- Frictionless operation
- No maintenance or lubrication
- Ideal for short stroke, high-force applications
- High vibration isolation level
- Easy, compact installation

Technical Data

Medium:
Compressed air lubricated or unlubricated, Nitrogen, water (with glycol)

Operating pressure:
5,5 bar recommanded dynamic pressure 8 bar max.

Ambient temperature:
-40°C … +70°C "Static"
-30°C … +50°C "Dynamic"
When operated at this temperature (+70°C) for pro-longed periods, the bellow will experience a reduce working life.
Static = constant/unchanging external load
Dynamic = vibration or a changing internal pressure as a result of changing external load

Important instructions:

Thrust:

The thrust depends on the height of the bellow. When height increases - the thrust decreases.

- Before installing the air bellow, check it carefully for any damage it may have suffered from transport or improper storage.
- Do not inflate the air bellow until it has been secured properly.

Clearance:

There must be enough clearance around the air bellow.

- The full surface of the metal parts is to be used to bear the forces.
- Air bellows must be equipped with lateral guides.
- Deflate the air bellows fully before removing
- Ensure that the bellows are not constantly in contact with hydraulic oil, lubricants, solvents, metal cuttings and welding sparks.
- Should the air bellow be subjected to special media in an application, ask IMI Precision Engineering for further information, specifying the medium, temperature and concentration

Stops:

To avoid damage when the bellow is compressed or extended mechanical stops at both end positions have to be used.

Dimensions

PM/31021, PM/31022, PM/31023

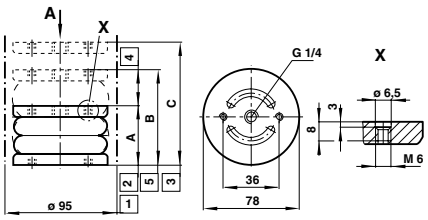

1 Installation diameter min.
2 Installation height min.
3 Installation height max.
4 Stroke
5 Recommended max. working height

PM/31041, PM/31042, PM/31043

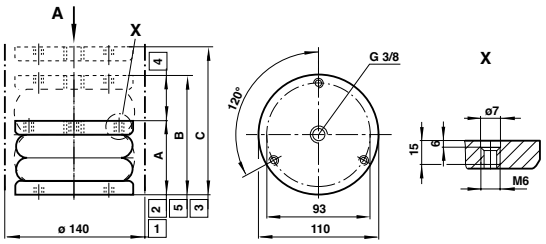

Models	Norminal Ø (inch) x convolutions	Recommended max. working height B (mm)	Stroke (mm)	Installation height A min. (mm)	Installation height C max. (mm)	Max. torque for mounting studs (Nm)	Weight (kg)
PM/31021	2 3/4 x 1	65	20	50	70	5	0,35
PM/31022	2 3/4 x 2	105	45	65	110	5	0,4
PM/31023	2 3/4 x 3	130	60	80	140	5	0,5
PM/31041	4 1/2 x 1	80	40	50	90	5	0,75
PM/31042	4 1/2 x 2	135	85	65	150	5	0,95

COMPACT AIR BELLOWS

PM/31000 Single acting – Ø 2 3/4 … 12"

PM/31061 to PM/31063

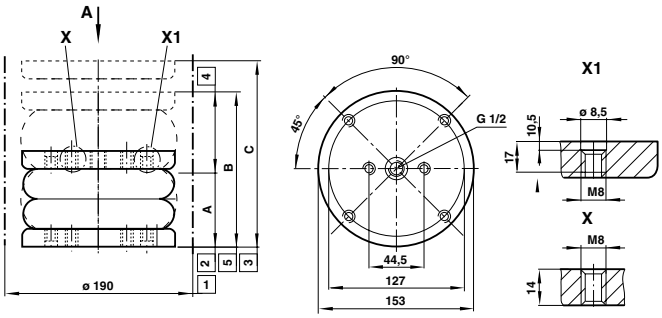

1 Installation diameter min.
2 Installation height min.
3 Installation height max.
4 Stroke
5 Recommended max. working height

Models	Norminal Ø (inch) x convolutions	Recommended max. working height B (mm)	Stroke (mm)	Installation height A min. (mm)	Installation height C max. (mm)	Max. torque for mounting studs (Nm)	Weight (kg)
PM/31061	6 x 1	100	55	55	110	12	2
PM/31062	6 x 2	170	115	80	190	12	2,7

PM/31081 to PM/31123

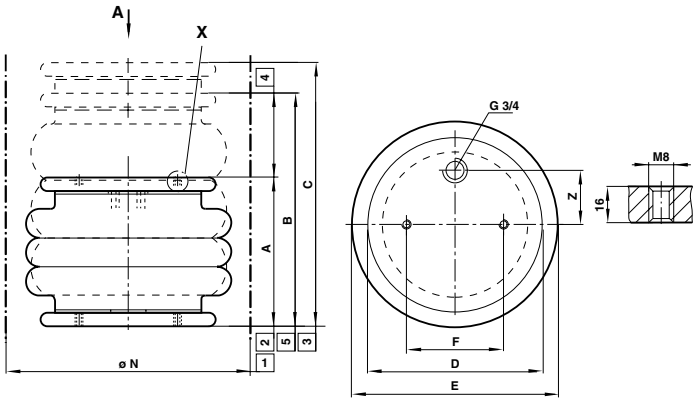

1 Installation diameter min.
2 Installation height min.
3 Installation height max.
4 Stroke
5 Recommended max. working height

Models	Norminal Ø (inch) x convolutions	Recommended max. working height B (mm)	Stroke (mm)	Installation height A min. (mm)	Installation height C max. (mm)	Max. torque for mounting studs (Nm)	Ø E	Ø D	Ø F	Ø N	Z	Weight (kg)
PM/31081	8 x 1	140	95	55	140	12	225	133	70	240	–	1,8
PM/31082	8 x 2	250	185	80	250	12	220	133	70	240	–	2,3
PM/31091	9 1/4 x 1	150	105	55	150	12	255	155	89	275	38	2,3
PM/31092	9 1/4 x 2	295	230	80	310	12	255	155	89	275	38	3,1
PM/31121	12 x 1	151	129	51	180	25	343	228	157	360	73	4,3
PM/31122	12 x 2	265	230	75	305	25	325	228	157	340	73	4,8

MAGNETICALLY OPERATED SWITCHES

M/50 Reed and Solid State

- Suitable for all cylinder ranges with magnetic piston
- When used on profile bodied actuators, switch fits flush with surface and requires no mounting bracket or adaptor
- LED indicator – Solid State (standard), Reed (LSU models only)
- Solid State switches are up to 4000 times faster in operation and have greater life expectancy

Technical Data

Operation:
Reed normally open
Solid State normally open PNP/NPN

Voltage a.c.:
Reed 10 … 240V
(M/50/LSU/CP 10 … 60V)

Voltage d.c.:
Reed 10 … 170V
(M/50/LSU/CP 10 … 60V)
Solid State 10 … 30V

Current max.:
Reed 180mA
Solid State 150mA

Response time:
Reed 1,8 ms
Solid State <0,5 ms

Models - Reed and ATEX approved switches

Accessories

Model	LED (Yellow)	Cable length / plug	Temperature range	Cable material	Features	Extension cable 5 m (PVC)	Extension cable 10 m (PVC)
M/50/LSU/2V	•	2 m	-25 … +80°C	PVC	Protection IP66	–	–
M/50/LSU/5V	•	5 m	-25 … +80°C	PVC	Protection IP66	–	–
M/50/LSU/10V	•	10 m	-25 … +80°C	PVC	Protection IP66	–	–
M/50/LSU/CP	•	0,3 m with M8 Plug	-25 … +80°C	PVC	Protection IP66	M/P73001/5	M/P73001/10

Models - Solid State and Atex approved switches

Accessories

Model	LED (Yellow)	Cable length / plug	Switching function	Temp range	Cable material	Ex-Identification	Extension cable 5 m (PVC)	Extension cable 10 m (PVC)
M/50/EAP/2V	•	2 m	PNP	-40 … +80°C	PVC	–	–	–
M/50/EAP/5V	•	5 m	PNP	-40 … +80°C	PVC	–	–	–
M/50/EAP/10V	•	10 m	PNP	-40 … +80°C	PVC	–	–	–
M/50/EAP/CP	•	0,3 m with M8 Plug	PNP	-40 … +80°C	PVC	–	M/P73001/5	M/P73001/10
M/50/EAP/CC	•	0,3 m with M12 Plug	PNP	-40 … +80°C	PVC	–	M/P34692/5	–

Note: If a bracket/adapter is required to attach a switch to a cylinder this part number is shown on the relevant actuator product page.

Vacuum

Single stage and multi stage vacuum pumps, a wide range of suction cups, plus switches, gauges and silencers. Use the fast find guide to get the part you need to get the job done. For rapid advice or order support, call us today.

Cups for most applications

Energy efficient

Fast Find Guide

Please note: These products represent only part of the IMI Precision Engineering vacuum range. If you can't see the option you require please contact us.

Vacuum Pumps

M/58112
Single stage

Page 45

M/58102
Multi stage

Page 46

Vacuum Cups & Bellows

M/58300, M/58400
Ø 6 … 150 mm

Page 48

Accessories

Vacuum Gauges

Page 50

SINGLE STAGE VACUUM PUMPS

M/58112

- Very high induced air capacity
- 14% lower air consumption than comparable single stage units
- No wearing parts
- Allows direct connection of suction cups and piped exhaust facility

Technical Data

Medium:
Compressed air, filtered and non-lubricated

Operating pressure:
5 bar optimum
8 bar maximum

Ambient temperature:
-20°C … +150°C
Air supply must be dry enough to avoid ice formation at temperatures below +2°C

Vacuum:
-0,85 bar maximum (M/58112/09)
-0,90 bar maximum (M/58112/11)

M/58112/09

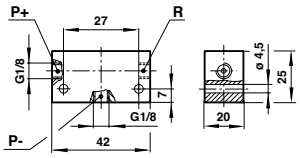

M/58112/11

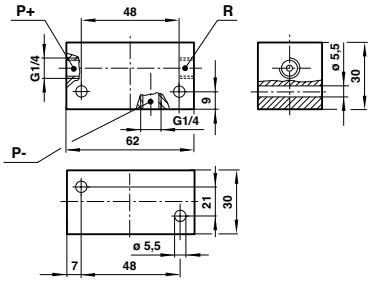

PRODUCT LINK

Tubing and fitting for vacuum applications ...

See Fittings, Tubing and Accessories section.

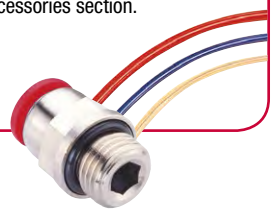

Induced air (Nl/min), free air

Model	0 bar	-0,1 bar	-0,2 bar	-0,3 bar	-0,4 bar	-0,5 bar	-0,6 bar	-0,7 bar	-0,8 bar
M/58112/09	28	24	18	14	11	8	5,5	3	1
M/58112/11	55	47	36	28	23	17	12	6	2,5

Time (sec) for evacuation of 1 litre volume to vacuum

Model	-0,1 bar	-0,2 bar	-0,3 bar	-0,4 bar	-0,5 bar	-0,6 bar	-0,7 bar	-0,8 bar	-0,85 bar	-0,9 bar
M/58112/09	0,27	0,56	0,89	1,44	2,00	2,88	4,31	7,97	14,36	–
M/58112/11	0,15	0,31	0,49	0,72	1,00	1,41	2,08	3,71	5,60	8,11

Note: Values given in the tables are theoretical and apply to an operating pressure of 5 bar.

Recommended tube dimensions (internal diameter)

Model	Compressed air	Vacuum	Exhaust
M/58112/09	> Ø 3	> Ø 5	> Ø 6
M/58112/11	> Ø 3	> Ø 7	> Ø 9

MULTI STAGE VACUUM PUMPS

M/58102

- Fast response
- Compact, lightweight
- Low sound level
- Compressed air driven
- Simple installation
- Standard and non-return valve types

Technical Data

Medium:
Compressed air, filtered and non-lubricated

Operating pressure:
6 bar maximum

Ambient temperature:
M/58102/10 … M/58102/30:
-20°C … +80°C
M/58102/60 … M/58102/120:
-20°C … +60°C
Air supply must be dry enough to avoid ice formation at temperatures below +2°C

Vacuum:
-0,87 bar maximum

Models

Model	Type	Silencer*	Induced air (Nl/min)**	Air consumption (Nl/min)**	kg
M/58102/10	Standard	Ported	80	49	0,080
M/58102/20	Standard	Ported	160	98	0,095
M/58102/30	Standard	Ported	240	144	0,110
M/58102/60	Standard	Integral	480	285	0,855
M/58102/90	Standard	Integral	708	471	1,105
M/58102/120	Standard	Integral	910	528	1,150

* For models with ported silencer, use silencer number M/58019.
** Values given are theoretical and apply to an operating pressure of 6 bar.

Vacuum flow performance

Induced air (nl/min), free air									
Model	**0 bar**	**-0,1 bar**	**-0,2 bar**	**-0,3 bar**	**-0,4 bar**	**-0,5 bar**	**-0,6 bar**	**-0,7 bar**	**-0,8 bar**
M/58102/10	80	55	32	28	25	18	13	5	1,5
M/58102/20	160	110	64	56	50	36	26	10	3
M/58102/30	240	165	96	84	75	54	39	15	4,5
M/58102/60	480	270	182	168	150	108	78	30	9
M/58102/90	708	427	273	252	225	162	117	45	13,5
M/58102/120	910	568	355	336	300	216	156	60	18

Time (sec) for evaluation of 1 litre volume to vacuum

Model	-0,1 bar	-0,2 bar	-0,3 bar	-0,4 bar	-0,5 bar	-0,6 bar	-0,7 bar	-0,8 bar	-0,85 bar
M/58102/10	0,070	0,200	0,450	0,750	1,150	1,730	2,610	4,130	5,820
M/58102/20	0,035	0,100	0,230	0,370	0,570	0,860	1,320	2,070	2,920
M/58102/30	0,023	0,070	0,150	0,250	0,380	0,580	0,870	1,380	1,940
M/58102/60	0,012	0,034	0,080	0,120	0,190	0,290	0,440	0,690	0,970
M/58102/90	0,007	0,023	0,050	0,080	0,130	0,190	0,290	0,460	0,650
M/58102/120	0,006	0,017	0,040	0,060	0,100	0,150	0,220	0,350	0,490

Note: Values given in the tables are theoretical and apply to an operating pressure of 6 bar.

Recommended tube size (internal diameter)

Model	Compressed air	Vacuum	Exhaust
M/58102/10	> Ø 3	> Ø 7	> Ø 9
M/58102/20	> Ø 3	> Ø 7	> Ø 9
M/58102/30	> Ø 4	> Ø 9	> Ø 9
M/58102/60	> Ø 4	> Ø 19	–
M/58102/90	> Ø 5	> Ø 19	–
M/58102/120	> Ø 5	> Ø 22	–

Dimensions

M/58102/10; …/20; …/30

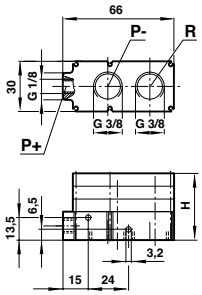

Model	H
M/58102/10	24,5
M/58102/20	32
M/58102/30	39,5

M/58102/60; …/90; …/120

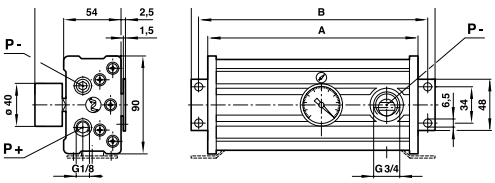

Model	A	B	C
M/58102/60	136	154	168
M/58102/90	196	214	228
M/58102/120	196	214	228

Vacuum gauge supplied with these units.

IMI Norgren

High quality pneumatic and fluid control products

With over 80 years industry experience, the IMI Norgren brand includes a wide range of high quality pneumatic and fluid control products such as actuators, air preparation products, pressure switches, fittings and valves.

The IMI Norgren brand also features some of our more specialist technology product ranges including:

- Precision liquid handling solutions including syringe pumps
- Products for the commercial vehicle sector
- Automation solutions including grippers, clamps and vacuum products
- Specialist high pressure equipment including dome and spring loaded regulators

Engineering GREAT Solutions

Find out more
www.imi-precision.com

IMI NORGREN

For further information, visit **www.imi-precision.com** and use the new improved search function. If you cannot see the option you require please contact us.

IMI Precision Engineering

VACUUM CUPS & BELLOWS

M/58300, M/58400 Ø 6 … 150 mm

- Flat cups ideal where minimal movement is required for pliable materials
- Bellows cups ideal where level compensation is required

Technical Data

Medium:
Vacuum

Ambient temperature:
-10°C … +70°C for NBR
-30°C … +200°C for VMQ cups
Air supply must be dry enough to avoid ice formation at temperatures below +2°C

Materials

M/58*/01:**
Cups: NBR
Connection fittings: aluminium

Material characteristics

	NBR
Wear resistance	Good
Oil resistance	Excellent
Weather resistance	Good
Ozone resistance	Fair

Models

Fx = μ x Fy
Where μ is the frictional coefficient of the material being handled.
An approximate guide:
Plastic: μ = 0,4 … 0,5 Steel, oiled: μ = 0,1 … 0,3 Glass: μ = 0,3 … 0,5

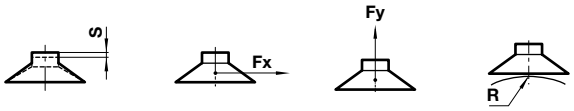

Flat Cups Model NBR	Dia. Ø (mm)	Fy -0,2 bar (N)	Fy -0,6 bar (N)	Fy -0,9 bar (N)	Minimum radius of work surface 'R' (mm)	Maximum movement 'S' (mm)	Volume cm³
M/58301/01	6	0,5	1,5	2,3	5	1,5	0,017
M/58302/01	8	1	2,5	3,5	7	1,5	0,041
M/58303/01	10	1,5	4	6	9	2	0,065
M/58304/01	15	2,7	8	12	12	4	0,330
M/58305/01	20	5	15,5	23	13	2	0,500
M/58306/01	25	9	26,5	40	17,5	2,5	0,750
M/58307/01	30	11	34	51	26	2,5	1,3
M/58308/01	40	19	57,5	86	37	3,5	3
M/58309/01	50	30	91	135	41	4	4,2
M/58310/01	80	86	260	390	100	6	21
M/58311/01	120	180	540	810	365	6	82
M/58312/01	150	280	842	1250	380	9	177

Bellow Cups Model NBR	Dia. Ø (mm)	Fy -0,2 bar (N)	Fy -0,6 bar (N)	Fy -0,9 bar (N)	Minimum radius of work surface 'R' (mm)	Maximum movement 'S' (mm)	Volume cm³
M/58403/01	10	1,5	3,5	5	3	4	0,225
M/58404/01	15	3	6	8	5	6	0,75
M/58405/01	20	6	10	14	8	5	1,4
M/58407/01	30	12	22	28	15	12	4,75
M/58408/01	40	22	40	50	30	10	9,25
M/58409/01	50	34	66	84	40	15	26,25
M/58410/01	75	75	170	230	70	14	76
M/58411/01	110	140	350	460	85	36	111

Note: Theoretical values are given in this table. Always allow a safety factor of >2.

Dimensions

Flat cups

Ø 6 … 30

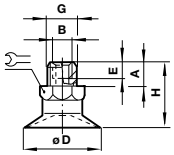

Ø 40 & 50

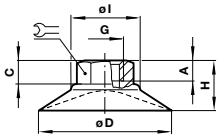

Ø 80

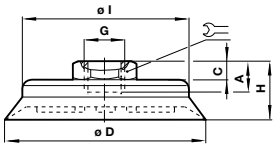

Ø 120 & 150

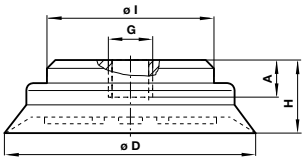

Model	Ø D	A	C	G	H	Ø I	
M/58301/01	6	4,5	–	M 5	15	–	8
M/58302/01	8	4,5	–	M 5	16	–	8
M/58303/01	10	4,5	–	M 5	20	–	8
M/58304/01	15	4,5	–	M 5	21	–	8
M/58305/01	20	8	–	G1/8 A	19,5	–	14
M/58306/01	25	8	–	G1/8 A	20	–	14
M/58307/01	30	8	–	G1/8 A	20,5	–	14
M/58308/01	40	6	9	G1/8	23	24	14
M/58309/01	50	6	11	G1/8	26	26	14
M/58310/01	80	13	3,5	G1/8	21,5	53	19
M/58311/01	120	9,5	–	G1/2	34,5	65	–
M/58312/01	150	9,5	–	G1/2	41,5	65	–

Bellows cups

Ø 10 … 30

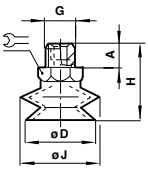

Ø 40 & 50

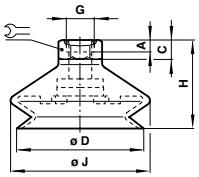

Ø 75

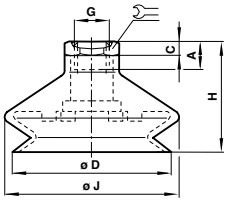

Ø 110 & 150

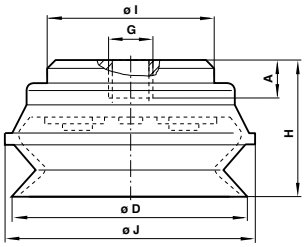

Model	Ø	A	C	Ø D	G	H	Ø I	Ø J	
M/58403/01	10	5	–	11	M 5	26	–	12	7
M/58404/01	15	5	–	16	M 5	29	–	17	7
M/58405/01	20	7,5	–	22	G1/8 A	30,5	–	24	14
M/58407/01	30	7,5	–	33	G1/8 A	39	–	36	17
M/58408/01	40	6	9	43	G1/8	37	–	46	17
M/58409/01	50	6	9	53	G1/8	43	–	59	17
M/58410/01	75	12	4	78	G1/8	50	–	83	21
M/58411/01	110	9,5	–	110	G1/2	66,5	65	122	–
M/58412/01	150	9,5	–	150	G1/2	85,5	65	167	–

ACCESSORIES

Vacuum gauges

- 0 … -1 bar calibration
- Accurate vacuum level indication

Dimensions

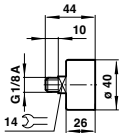

Models

Model	Range
M/58080	0 … -1 bar

Valves

IMI Precision Engineering has all manner of control valves – in line, sub base, valve islands, electrically or air operated, manual and mechanical valves, for just compressed air or complex fluid control requirements. We have ISO and NAMUR standard ranges and cover many ATEX requirements. Tried and trusted product ranges like IMI Buschjost, IMI Herion, Walter, IMI FAS, Webber, Enots and Martonair.

Our valve islands feature a 24/7 online configurator for specification, technical information including CAD, pricing, lead time and ordering. For expert advice and guidance, contact the please contact us.

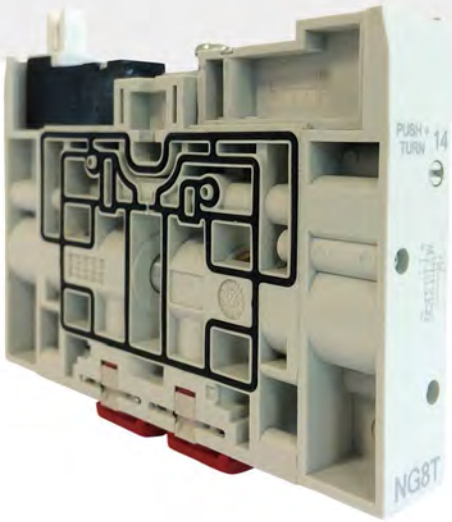

Simple to complex

Over 20,000 combinations

Rugged and Reliable

Fast Find Guide

Please note: These products represent only part of the IMI Precision Engineering valves range. If you can't see the option you require please contact us.

Valve Islands

VM10 2 x 3/2, 5/2 & 5/3 10 mm  Page 57	**VM15** 2 x 3/2, 5/2 & 5/3 15 mm  Page 58	**VS18** 2 x 3/2, 5/2 & 5/3 ISO 15407-2 18 mm  Page 59	**VS26** 2 x 3/2, 5/2 & 5/3 ISO 15407-2 26 mm  Page 60

Sub-base Valves

V40/V41 2 x 3/2, 5/2 & 5/3 Valve ISO 15407-1/VDMA 24 563 18 mm  Page 63	**V44/V45** 2 x 3/2, 5/2 & 5/3 Valve ISO 15407-1/VDMA 24 563 26 mm  Page 68	**ISO★STAR** 5/2 & 5/3 ISO #1 … ISO #3 Page 73	**UM/22000** 5/2 & 5/3 ISO #4  Page 76

In-line and Manifold Valves

V60 … 63 3/2, 2x3/2, 5/2 & 5/3 G1/8 … G1/2  Page 79	**V50 … 53** 3/2, 5/2 & 5/3 G1/8 … G1/2  Page 90	**EXCEL 22, M/49** 3/2 G1/8  Page 94

Special Purpose Valves

Two-hand control unit XSHC04 4 mm PIF  Page 95	**Safety valves SCVA** 3/2 G1/4, G3/4, G1  Page 96	**Safety valves SCVA10** 3/2 G1/2  Page 98	**Safety valves SCSQ** 3/2 G1/2  Page 100	**Solenoid actuated press safety valves XSz** 3/2 G1/4 … G2  Page 102

Manual/Mechanical Valves

Super X 3/2, 5/2 & 5/3 G1/8, G1/4  Page 106	**VHLA** 4/2, 4/3 APB G1/4 … G1/2  Page 116	**M/1700** 5/2, 5/3 G1/4, G1/2  Page 117	**S/666** 3/2 G1/8  Page 118

Fast Find Guide

Please note: These products represent only part of the IMI Precision Engineering valves range. If you can't see the option you require please contact us.

Proportional Valves

VP50S
G1/4

Page 120

VP51
G1/4

Page 121

Process Industry

82510
2/2
G1/4 … G3/8

Page 123

82400
2/2
G1/4 … G2

Page 124

84500
2/2
G1/2 … G2

Page 125

95000
2/2
G1/4

Page 127

96000
3/2
G1/4

Page 128

Flow Control Valves

C00GE, C00GP
Ø 4 … 12 mm

Page 130

T1000 Uni-directional
M5, G1/8 … G1/2

Page 209

T1100 Bi-directional
G1/8 … G1/2

Page 209

T20
M5, G1/8 … G1/2

Page 210

COT, COK, COS, COL BANJO FLOW REGULATORS
(COMPOSITE BODY)

Page 196

10K51, BANJO FLOW REGULATORS
(METAL BODY)

Page 196

16K51, BANJO FLOW REGULATORS
(METAL BODY)

Page 201

Other Valves and Accessories

T55 Non-return valves
M5, G1/8 … G1/2

Page 131

C00GL
Non-return valves
Ø 4 … 12 mm

Page 211

T65 Shuttle valves
G1/8 & G1/4

Page 131

T70
Quick exhaust valves
G1/8 … G1/2

Page 212

Solenoid plugs and cables
15 mm, 22 mm & 30 mm

Page 132

DESIGN & SIZING IN PNEUMATICS

Golden Rules

Design and sizing in pneumatics is often based upon experience coupled with an element of fear of under specifying crucial equipment. In an attempt to ensure enough power, engineers may select over sized cylinders and then select oversized valves to supply them with enough air. The same uncertainty can also lead to over sized specification of air line equipment, fittings and tubing. The outcome is components larger than necessary that use too much compressed air and waste energy and money. However when following some well proven golden rules and a few laws of pneumatics it is easy to achieve correctly sized pneumatic installations.

BASICS TO CONSIDER:

The cylinder: The force required, the pressure available, the speed of movement and air consumption. ISO and VDMA standard or compact style as well as cushioning and sensors.

The valve: Flow to achieve the time for the cylinder movement. Solenoid, air pilot, manual or mechanical operator. In line, manifold or sub-base mounting or tailor made valve island. Solenoid individually wired or with multipole or fieldbus.

Air preparation: Flow rating and micrometre size of the filter element. Automatic or manual drain, piping away the condensate. Source pressure and optimal working pressure. Pressure regulator for standard or precision regulation. Lubrication, Oil-fog or Micro-fog.

Fittings and tubing: Compression, push-on or push-in fittings. Metal, nylon or soft polyurethane tubing. Correct sizing of fittings and tubing combination according to flow requirements.

General: Temperature and environmental conditions.

GOLDEN RULES:

The cylinder:

The Correct sizing is based upon the required force and applied pressure. Go to page 14 for more information on cylinder sizing and air consumption.

Golden rule: The theoretical force of the cylinder should be 25% extra for high speed, 50% extra for low speed and 100% extra for ultra low speed (positioning) applications.

The Valve:

Developments in valve technology have given higher flow in smaller valve envelope sizes - eg. the flow from a traditional 42 mm wide ISO #1 valve is about 1250l/min, a modern valve that can deliver the same flow is only 20 mm wide. The old rule of selecting a control valve with the same port size as the cylinder has a number of drawbacks. Firstly the cylinder port may not have a full through bore and secondly the cylinder may not be required for anything near it's maximum potential speed. Far better is to match valve flow to the flow requirement of the cylinder for a particular application.

The graph gives a guide to the typical flow ranges appropriate to different nominal valve sizes. The flow values indicated by the vertical lines are at 6 bar, with 1bar pressure drop.

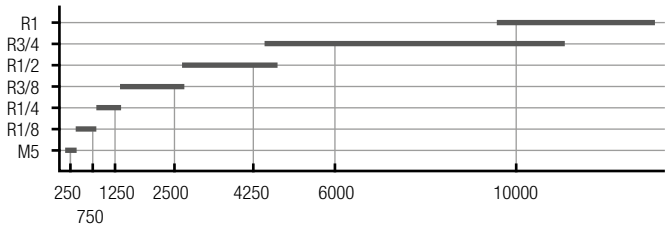

Golden rule: Calculate the greatest instantaneous flow required by the cylinder. This is the flow rate required during the fastest stroke. Do not use l/min average values.

Filtration & Lubrication:

In general, pneumatics are designed for working in a wide temperature range from -20°C up to +80°C. Electrical parts like solenoids are limited to +50°C, but specific figures can be found in the catalogue.

For filtration and dew point the following apply: 5°C to 50°C ambient temperature,40 micron filtration and a dew point of 10°C lower than the ambient temperature is recommended.

Below 5°C and above 50°C, 25 or 5 micron filtration is recommended and below 5°C a dew point 5°C lower than the ambient temperature is recommended.

Valves and cylinders are greased on assembly and operate under normal conditions without additional lubrication. However using a lubricator will extend the life of these products.

Golden rule: Always lubricate when:

- Valve frequency is >3 Hz
- Cylinder speed is high
- Ambient temperature is below freezing point or above 50°C
- There is a combination of the conditions above.

If possible always lubricate and if you start to lubricate then continue to do so.
Use micro-fog lubricators for cylinders and oil-fog lubricators for air tools.

Fittings & Tubing:

Golden rule: Rule number one is use as few fittings as possible. Tubing should be as short as practical and be related to port thread sizes - e.g. Ø 8/6 mm for G1/4. Banjo type fittings and quick connection couplings can be restrictive to flow. Minimise the use of elbows, Y's and tee connectors. For use below freezing or when exposed to sunlight use black plastic tubing.

If you do not want to calculate use the golden rule table:

Valve size	Flow l/min	Tube Ø mm	Cylinder max. Ø mm
M5	250	6/4	40
1/8"	750	8/6	63
1/4"	1250	10/7	80
3/8"	2500	12/8,5	125
1/2"	4250	16/12	160
3/4"	6000	22/17	250
1"	10000	26/18	320

Based on cylinder speed of 500 mm/sec, 50% loaded, cylinder pressure 5 bar, 1 metre tube length and two fittings per tube.

DESIGN & SIZING IN PNEUMATICS

Golden Rules

BEST PRACTISE

Compressed air is not free and must be used with consideration. Compression from 7 - 10 bar has the same cost as compression from 0 - 7 bar, this means that pressure should be as low as possible. Use pressure regulators where possible. Cylinders and valves should be correctly sized. Tubing that is unnecessarily long or large in diameter will waste energy and adversely influence response times. Locally placed valve islands will use shorter tube lengths than valves in centrally placed control cabinets. If you are in doubt or just need good advice contact us. We will always be pleased to help you. We have decades of experience in pneumatic control, design and sizing.

Frequently asked questions in pneumatics typically concern: air quality, cylinder forces, loading and bending, air consumption plus valve flow and lubrication. The tables on this page can be used in combination with the guidance and golden rules stated on the previous page. For sizing cylinders and air consumption go to page 14.

AIR QUALITY

ISO 8573-1 specifies quality classes for compressed air. A class number is made up from the individual maximum allowable contents of solid particles, water and oil in air and can be used to specify air quality for use with valves and other pneumatic applications.

Class	Solids particle size max µm	concentration maximum mg/m³	Water Max. Pressure Dew Point °C	Oil concentration mg/m³
1	0,1	0,1	-70	0,01
2	1	1	-40	0,1
3	5	5	-20	1
4	15	8	+3	5
5	40	10	+7	25
6	–	–	+10	–

For general applications where ambient temperature is between +5 and +35°C, air quality to ISO8573-1 class 5.6.4 is normally sufficient. This is 40 µm filtration, +10°C maximum pressure dew point and 5 mg/m³ maximum oil content. Pressure dew point is the temperature to which compressed air must be cooled before water vapour in the air starts to condense into water particles.

VALVE FLOW

There are a variety of standards and methods for the measurement and display of valve flow performance. These can give rise to confusion and difficulty when comparing the published performance of different valves. The table below provides conversion factors as a guide to expressing valve performance in different units.

FLOW FACTOR CONVERSION TABLE

	Factors Cv	Kv	C	Flow * m³/h	l/min	Orifice Size A	S
Cv	1	0,869	4,08	59,1	985	16,3	21,5
Kv	1,15	1	4,69	67,9	1132	18,7	24,7
C	0,245	0,213	1	14,5	241	4,11	5,27
m³/h	0,017	0,015	0,069	1	16,67	0,276	0,364
l/min	0,001	0,0088	0,0041	0,06	1	0,016	0,022
A	0,061	0,053	0,243	3,62	60,4	1	1,31
S	0,046	0,04	0,189	2,75	45,8	0,761	1

* Flow parameters are 6 bar inlet and 5 bar outlet at 20°C, 1013 mbar and 65% humidity.

HOW TO USE

There Select the unit of measurement that is known in the left hand column and multiply by the factor given in the column of the required unit of measurement.

'Cv' is specified by ANSI/NFPA
'Kv' used in Germany and based on water flow.
'C' sonic conductance in dm³/s/bar specified by ISO 6358
'A' effective area in mm² specified by ISO 6358
'S' effective area in mm² according to the Japanese standard JIS B 8375
A further measurement is the NW value. This gives the equivalent diameter in mm² of the smallest path through a valve. This is non-comparable and not in the table.

LUBRICANTS

When to lubricate, via an oil-fog or micro-fog lubricator, is generally explained in this catalogue. However the oil recommended is very much dependant on the local conditions and not least availability of various brands and labels. In each country IMI Precision Engineering can recommend equivalent products, based on the information from the suppliers.

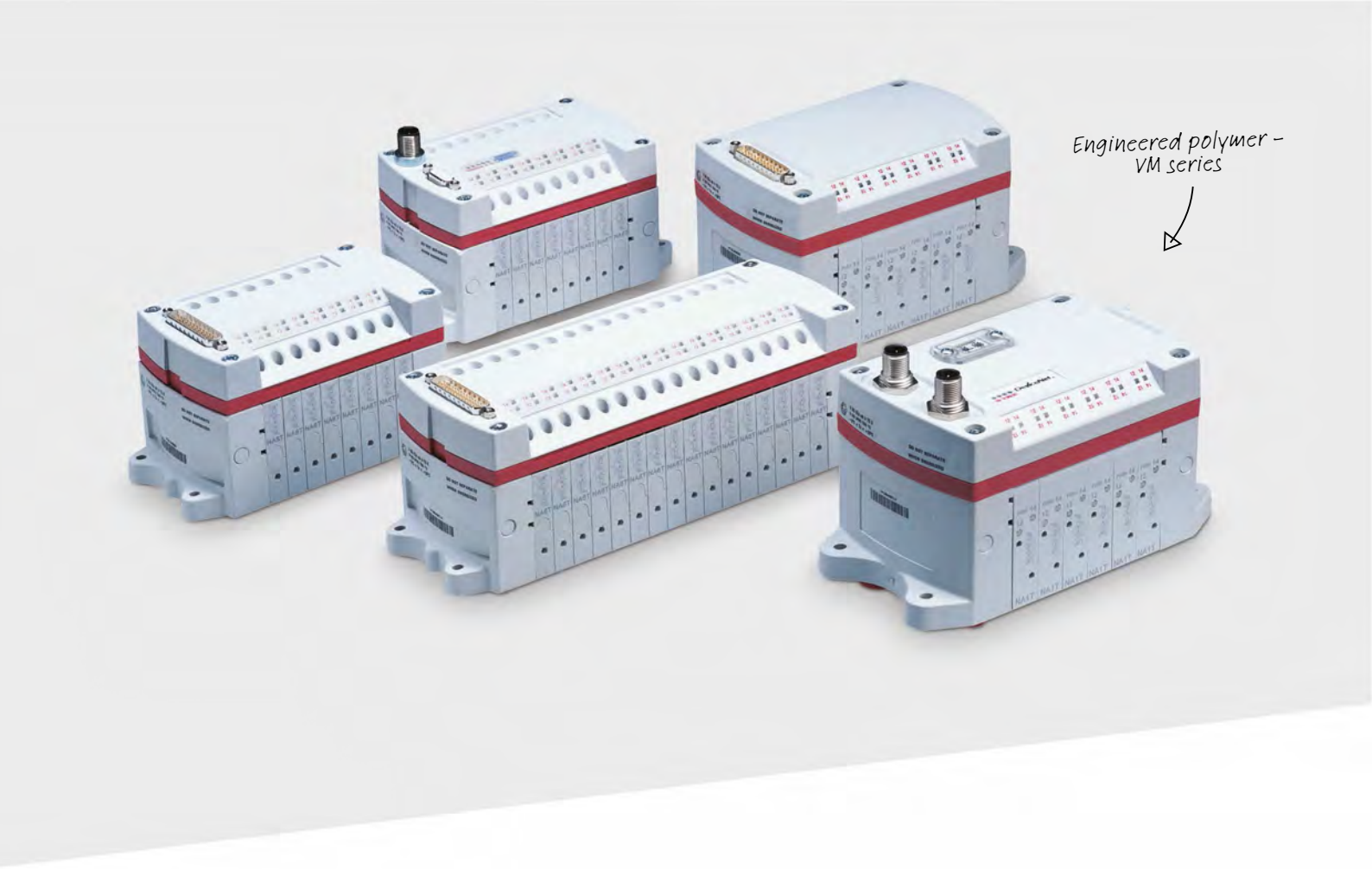

Valve islands

For almost 20 years, IMI Precision Engineering has been able to offer a pre-assembled valve block generally known as a 'valve island'. The current VM and VS series offer a choice of product to meet most industrial control applications.

VM is a lightweight, high-strength polymer manifold, while VS is a more traditional diecast aluminium base system which conforms to an ISO dimensional standard. Both can be configured online via our configurator software which gives immediate technical data including CAD, price and delivery information.

All common valve functions are covered, port connections can be threaded or complete with push-in fittings. Electrical connection is via individual wires, multipole connector or fieldbus in a number of industry-standard protocols.

- Light, strong assembly meeting IP65 protection standard
- All common valve functions (2/2, 3/2, 5/2 and 5/3) can be combined and up to 40 solenoids per island are possible
- Choice of valve spool types (VS only), soft seal or glandless for higher flow or extended life in excess of 200 million cycles
- Diagnostics as standard on all electrical connections, and full traceability of island throughout its life supported by the IMI Precision Engineering production system
- All our Valve islands can be configured on our new easier to use Valve Island Configurator
- Industry standard protocols now include Profinet IRT and Ethernet/IP

Conforms to ISO15407-2
– VS series

EtherNet/IP™

PROFINET®

Engineering
GREAT Solutions

Find out more
www.imi-precision.com

IMI NORGREN®

VALVE ISLANDS

VM10 2 x 3/2, 5/2 or 5/3 – 10 mm

- Valve slices 2 x 3/2, 5/2 and 5/3 with integral push-in fittings Ø 6 mm
- Compact and lightweight
- High flow from 10 mm valve width
- To configure and order a Valve Island visit - vi.norgren.com

Technical Data

Medium:
Compressed air, filtered, lubricated and non-lubricated

Operation:
Spool valve indirectly actuated

Port sizes:
Ø 6 mm Push-in fittings

Flow:

Function	l/min
5/2 ports 1 » 2 & 4	430
5/2 ports 2 » 3 & 4 » 5	400
3/2 and 5/3	350

Ambient temperature:
-5°C … +50°C
Air supply must be dry enough to avoid ice formation at temperatures below +2°C

Protection classification

UL/CSA approval	Recognized to UL 429 - 5th edition & CSA 22.2 No.139 - 1982 for Electrically Operated Valves.	**ATEX**	The 24 V d.c. multipole and fieldbus valve islands fulfil the requirement of the standard EN60079-0:2012 and EN60079-15:2010 for intended use in explosive atmospheres.	For Ex applications conforming to Zone 2 category ATEX 3G (gases): II3G Ex nA IIc T5 Gc Zone 22 category ATEX 3D (dusts): II3D Ex tc IIIc T90°C Dc -5°C < Ta > +50°C	Please review all ATEX data and notes in the installation and maintenance instruction manual to ensure correct and safe installation of the valve island.

Models - 2 x 3/2 Double solenoid actuated valves

Model	Function	Actuation	Pilot supply	Manual override	Operating pressure (bar)	Pilot pressure (bar)
VM106A11AB313B	2 x 3/2 NC	Solenoid/Spring	Internal	Push only	3 … 8	–
VM106B11AB313B	2 x 3/2 NO	Solenoid/Spring	Internal	Push only	3 … 8	–
VM106C11AB313B	2 x 3/2 NO/NC	Solenoid/Spring	Internal	Push only	3 … 8	–

Models - 5/2 Single and double solenoid actuated valves

Model	Function	Actuation	Pilot supply	Manual override	Operating pressure (bar)	Pilot pressure (bar)
VM106517AB313B	5/2	Solenoid/Spring	Internal	Push only	3 … 8	–
VM106511AB313B	5/2	Solenoid/Solenoid	Internal	Push only	2 … 8	–

Models - 5/3 Double solenoid actuated valves

Model	Function	Actuation	Pilot supply	Manual override	Operating pressure (bar)	Pilot pressure (bar)
VM106611AB313B	5/3 APB	Solenoid/Solenoid	Internal	Push only	3 … 8	–

Note: For 5/3 COE please use 2 x 3/2 NC. For 5/3 COP please use 2 x 3/2 NO.
APB = All Ports Blocked, COE = Centre Open Exhaust, COP = Centre Open Pressure.

PRODUCT PLUS

The perfect solution…

Offering flow rates up to 430 l/m, VM10 is the perfect solution when needing to operate smaller roundline or compact cylinders on a machine system. Easier and quicker to install than traditional individual valves, islands can save money by vastly reducing build times

VALVE ISLANDS

VM15 2 x 3/2, 5/2 or 5/3 – 15 mm

- Valve slices 2 x 3/2, 5/2 and 5/3 with integral push-in fittings Ø 8 mm
- Compact and lightweight, integral push in fittings
- High flow from 15 mm valve width
- To configure and order a Valve Island visit: vi.norgren.com

Technical Data

Medium:
Compressed air, filtered, lubricated and non-lubricated

Operation:
Spool valve indirectly actuated

Port sizes:
Ports 2 & 4: Ø 8 mm push-in fittings

Flow:

Function	l/min
5/2	1000
2x3/2	965
5/3	900

Ambient temperature:
-5°C … +50°C
Air supply must be dry enough to avoid ice formation at temperatures below +2°C

PRODUCT PLUS

To configure your own valve island please visit vi.norgren.com

Models - 2 x 3/2 Double solenoid actuated valves

Model	Function	Actuation	Pilot supply	Manual override	Operating pressure (bar)	Pilot pressure (bar)
VM158A11AB313B	2 x 3/2 NC	Solenoid/spring	Internal	Push only	3 … 8	–

Models - 5/2 Single and double solenoid actuated valves

Model	Function	Actuation	Pilot supply	Manual override	Operating pressure (bar)	Pilot pressure (bar)
VM158517AB313B	5/2	Solenoid/spring	Internal	Push only	3 … 8	–
VM158511AB313B	5/2	Solenoid/solenoid	Internal	Push only	3 … 8	–

PLUG-IN MINI ISO VALVE ISLANDS

VS18 2 x 3/2, 5/2 or 5/3, size 18 mm

- Field expandable with single add-on stations
- VS18S Softseal spool for high flow
- UL and ATEX
- To configure and order a Valve Island visit - vi.norgren.com
- Conforms to ISO 15407-2 Size 18mm

Technical Data

Medium:
Compressed air, filtered to 40 µm, lubricated or non-lubricated

Flow:
Softseal

Function	l/min
2x3/2	600
5/2; 5/3	650

Mounting:
Sub-base

Operating pressure:
Maximum pressure
10 bar VS18S models solenoid pilot actuated valves with internal pilot supply

Ambient/Media temperature:
Ambient:-15°C … +50°C
Media: -5°C … +50°C
Air supply must be dry enough to avoid ice formation at temperatures below +2°C

PRODUCT LINKS

If you require...

Individual hard wired valves on the VS valve islands, use V40/41 and V44/45.

See page 63 and 68

Models - 2 x 3/2 Double solenoid actuated softseal valves (flow 600 l/min)

Model	Function 2x2/2	Actuation/return	Pilot supply	Pilot pressure (bar)	Operating pressure (bar)	Manual override	Voltage	Short code
VS18SA11DF313A	NC	Sol/Spring	Internal	–	2,5 … 10	Push only	24 V d.c. 1,2 W	SAU
VS18SB11DF313A	NO	Sol/Spring	Internal	–	2,5 … 10	Push only	24 V d.c. 1,2 W	SBU
VS18SC11DF313A	NO/NC	Sol/Spring	Internal	–	2,5 … 10	Push only	24 V d.c. 1,2 W	SCU

NO = Normally open, NC = Normally closed.

Models - 5/2 Single and double solenoid actuated softseal valves (flow 650 l/min)

Model	Actuation/return	Pilot supply	Pilot pressure (bar)	Operating pressure (bar)	Manual override	Voltage	Short code
VS18S511DF313A	Sol/Sol	Internal	–	2 … 10	Push only	24 V d.c. 1,2 W	SJU
VS18S517DF313A	Sol/Spring	Internal	–	2 … 10	Push only	24 V d.c. 1,2 W	SGU

Models - 5/3 Double solenoid actuated softseal valves (flow 650 l/min)

Model	Function 2x2/2	Actuation/return	Pilot supply	Pilot pressure (bar)	Operating pressure (bar)	Manual override	Voltage	Short code
VS18S611DF313A	APB	Sol/Sol	Internal	–	2 … 10	Push only	24 V d.c. 1,2 W	SLU
VS18S711DF313A	COE	Sol/Sol	Internal	–	2,5 … 10	Push only	24 V d.c. 1,2 W	SQU

APB = All Ports Blocked, COE = Centre Open Exhaust.

Electrical details for solenoid operators

Voltage tolerances	(24 V d.c) +/- 10%
Rating	100% Continuous duty
Inlet orifice	0,8 mm
Indication	LED green
Surge surpression	Transil diode
Materials	PPS (body), FKM and NBR (seal)

Note: For alternative voltage and voltage tolerances please contact us.

Protection classification (IP Code):
All VS18 valve islands fulfill IP65 and NEMA4 ratings.

Power supply and precautions:
All VS18 24 V d.c products are designed to be used with a protective extra low voltage (PELV) power supply. Connection of the protective earth (PE) ground is required.

UL approval:
Recognized to UL 429 for Electrically Operated Valves.

ATEX:
The 24 V d.c Multipole and Fieldbus valve islands fulfils the requirement of the standard 94/9/EC for intended use in hazardous locations.

Ex nA IIC T4 Gc X
Ex tC IIIC T135°C Dc
-15°C < tamb < 50°C

Equipment group, category, type of protection:
The Declaration of Conformity of the valve islands was conducted by Norgren GmbH, D-70731 Fellbach. Please review all ATEX data and notes in the maintenance and instruction booklet to eliminate any risks, allowing for safe function of the valve islands.

PLUG-IN MINI ISO VALVE ISLANDS

VS26 2 x 3/2, 5/2 or 5/3, size 26 mm

- Field expandable with single add-on stations
- VS26S Softseal spool for high flow
- UL and ATEX
- To configure and order a Valve Island visit - vi.norgren.com
- Conforms to ISO 15407-2 Size 26 mm

Technical Data

Medium:
Compressed air, filtered to 40 µm, lubricated or non-lubricated

Flow:
Softseal

Function	l/min
2x3/2	1250
5/2; 5/3	1350

Mounting:
Sub-base

Operating pressure:
Maximum pressure
10 bar VS26S models solenoid pilot actuated valves with internal pilot supply

Ambient/Media temperature:
Ambient: -15°C … +50°C
Media: -5°C … +50°C
Air supply must be dry enough to avoid ice formation at temperatures below +2°C

Models - 2x3/2 Double solenoid actuated softseal valves (flow 1250 l/min)

Model	Function 2 x 3/2	Actuation	Pilot supply	Pilot pressure (bar)	Operating pressure (bar)	Manual override	Voltage	Short code
VS26SA11DF313A	NC	Sol/Spring	Internal	–	3 … 10	Push only	24 V d.c. 1,2 W	SAU
VS26SB11DF313A	NO	Sol/Spring	Internal	–	3 … 10	Push only	24 V d.c. 1,2 W	SBU
VS26SC11DF313A	NO/NC	Sol/Spring	Internal	–	3 … 10	Push only	24 V d.c. 1,2 W	SCU

NO = Normally open, NC = Normally closed.

Models - 5/2 Single and double solenoid actuated softseal valves (flow 1350 l/min)

Model	Actuation	Pilot supply	Pilot pressure (bar)	Operating pressure (bar)	Manual override	Voltage	Short code
VS26S511DF313A	Sol/Sol	Internal	–	2 … 10	Push only	24 V d.c. 1,2 W	SJU
VS26S517DF313A	Sol/Spring	Internal	–	2 … 10	Push only	24 V d.c. 1,2 W	SGU

Models - 5/3 Double solenoid actuated softseal valves (flow 1350 l/min)

Model	Function 2x2/2	Actuation/return	Pilot supply	Pilot pressure (bar)	Operating pressure (bar)	Manual override	Voltage	Short code
VS26S611DF313A	APB	Sol/Sol	Internal	–	2,5 … 10	Push only	24 V d.c. 1,2 W	SLU
VS26S711DF313A	COE	Sol/Sol	Internal	–	2,5 … 10	Push only	24 V d.c. 1,2 W	SQU

APB = All Ports Blocked, COE = Centre Open Exhaust.

Electrical details for solenoid operators

Voltage tolerances	(24 V d.c) +/- 10%
Rating	100% Continuous duty
Inlet orifice	0,8 mm
Indication	LED green
Surge surpression	Transil diode
Materials	PPS (body), FKM and NBR (seal)

Note: Alternative voltage and voltage tolerances see option selector contact us.

Protection classification (IP Code):
All VS18 valve islands fulfill IP65 and NEMA4 ratings.

Power supply and precautions:
All VS18 24 V d.c products are designed to be used with a protective extra low voltage (PELV) power supply. Connection of the protective earth (PE) ground is required.

UL approval:
Recognized to UL 429 for Electrically Operated Valves.

ATEX:
The 24 V d.c Multipole and Fieldbus valve islands fulfils the requirement of the standard 94/9/EC for intended use in hazardous locations.

Ex nA IIC T4 Gc X
Ex tC IIIC T135°C Dc
-15°C < tamb < 50°C

Equipment group, category, type of protection:
The Declaration of Conformity of the valve islands was conducted by Norgren GmbH, D-70731 Fellbach. Please review all ATEX data and notes in the maintenance and instruction booklet to eliminate any risks, allowing for safe function of the valve islands.

MINI ISO VALVES

V40/V41 2 x 3/2, 5/2 and 5/3, Solenoid and pilot actuated, ISO 15407-1/VDMA 24 563, Size 18 mm

- High performance, compact design
- Flexible sub-base system
- Multipressure system capability
- Wide range of accessories
- Dual spool technology
  - V40 Glandless spool and sleeve (long life)
  - V41 Softseal spool (high flow)

Technical Data

Medium:
Compressed air, filtered to 40 µm, lubricated or non-lubricated

Operation:
V40: Glandless spool valve, solenoid pilot or air pilot actuated
V41: Softseal spool valve, solenoid pilot or air pilot actuated

Flow:
V41 Softseal

Function	l/min
2x3/2	610
5/2	650
5/3	680
V40 Glandless	
5/2	570
5/3	610

Mounting:
Sub-base

Ports 2+4:

Operating pressure:
Maximum pressure
10 bar V41 models and V40 solenoid pilot actuated valves with internal pilot supply
16 bar V40 solenoid pilot actuated valves w. ext. pilot supply and V40 air pilot actuated valves

Details of minimum and maximum pilot pressure see overleaf

Ambient temperature:
-15°C … +50°C
V40/V41 solenoid and V41 air pilot models
-15°C … +80°C
V40 air pilot models

Air supply must be dry enough to avoid ice formation at temperatures below +2°C

Models - 2 x 3/2 Solenoid pilot actuated softseal valves

Model	Function 2 x 3/2	Actuation/return	Pilot supply	Pilot exhaust	Operating pressure (bar)	Pilot pressure (bar)	Flow (l/min)
V415A11D-C313A	NC	Solenoid/Spring	Internal	Collected #	2,5 … 10	–	610

Models - 5/2 Solenoid pilot actuated glandless and softseal valves

Model	Pilot supply	Pilot exhaust	Operator 14	Operator 12	Operating pressure (bar)	Pilot pressure (bar)	Sealing system	Flow (l/min)
V405513D-C313A	Internal	Collected #	Solenoid	Air spring	1 … 10	–	Glandless	570
V415513D-C313A	Internal	Collected #	Solenoid	Air spring	1 … 10	–	Soft seal	650
V405516D-C313A	Internal	Collected #	Solenoid	Spring	1,6 … 10	–	Glandless	570
V415517D-C313A	Internal	Collected #	Solenoid	Spring	2 … 10	–	Soft seal	650
V405511D-C313A	Internal	Collected #	Solenoid	Solenoid	2 … 10	–	Glandless	570

Models - 5/3 Solenoid pilot actuated glandless and softseal valves

Model	Function	Pilot supply	Pilot exhaust	Operator 14	Operator 12	Operating pressure (bar)	Pilot pressure (bar)	Sealing system	Flow (l/min)
V405611D-C313A	APB	Internal	Collected #	Solenoid	Solenoid	2 … 10	–	Glandless	610
V415611D-C313A	APB	Internal	Collected #	Solenoid	Solenoid	2 … 10	–	Soft seal	680
V405711D-C313A	COE	Internal	Collected #	Solenoid	Solenoid	2 … 10	–	Glandless	610
V415711D-C313A	COE	Internal	Collected #	Solenoid	Solenoid	2 … 10	–	Soft seal	680

# Pilot exhaust collected and exhausted via port 14.
APB = All Ports Blocked, COE = Centre Open Exhaust, NC = Normally closed.

Voltage codes

Voltage	Coil code	Current
24 V d.c.	C313A	1,2 W

Other voltages available on request. Spare pilot valves are delivered with mounting screws.

Electrical details for solenoid operators

Voltage tolerances	-10%/+15%
Rating	100% Continuous duty
Inlet orifice	0,8 mm
Electrical connection	15 mm DIN EN 175301-803 (DIN 43 650) Table C
Manual override	Shrouded push button, spring return Convertible into lockable type with set-up kit, part no. V70532-K00
Protection class	IP 65 with sealed plug (ISO 6952) NEMA 4
Materials	PPS (body), FPM and NBR (seal)

Intrinsically safe version available on request.

Models - 5/2 Air pilot actuated glandless and softseal valves

Model	Operator 14	Operator 12	Operating pressure (bar)	Pilot pressure (bar)	Sealing system	Flow (l/min)
V405537A-X0090	Air	Spring	-0,9 … 16	1,6 … 16	Glandless	570
V415537A-X0090	Air	Spring	-0,9 … 10	2 … 10	Soft seal	610
V405533A-X0020	Air	Air	-0,9 … 16	2 … 16	Glandless	570

Models - 5/3 Air pilot actuated glandless and softseal valves

Model	Function	Operator 14	Operator 12	Operating pressure (bar)	Pilot pressure (bar)	Sealing system	Flow (l/min)
V415633A-X0020	APB	Air	Air	-0,9 … 10	2 … 10	Soft seal	680

APB = All Ports Blocked

Accessories

DIN EN 50 022 rail (1 m)	DIN-rail mounting kit	Blanking disc to modular sub-base	Manual override set-up kit	Blanking plate for unused station
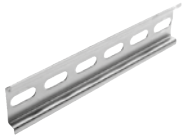				
V10009-C00 (35 x 7,5 mm)	V70531-KA0	V70422-K50 (Ports 1,3,5)	V70532-K00	V70400-K50

Sandwich plates

Double pressure regulator plate

V70427-K54 (Ports 2+4 reg.)

PRODUCT PLUS

Looking for long life valves?

For high cycling applications or extended life expectancy, select a glandless spool. Whilst having slightly lower flow rates, operating life is extended above soft seals, friction levels are lower and operation remains constant throughout the life of the valve.

PRODUCT LINKS

Connectors and cables

For a full selection of 15 mm DIN EN175301-803 Form C plugs and cables

See page 132

MINI ISO VALVES

V40/V41 2 x 3/2, 5/2 and 5/3, Solenoid and pilot actuated, ISO 15407-1/VDMA 24 563, Size 18 mm

Bases

Accessories

Single station Model	Description	Straight fitting	Elbow fitting	Silencer
				
V70401-A5B	Single station side ported with pilot ports – G 1/8	C02250618	C02470618	T40C1800

Modular sub-bases and end plates Model	Description	Straight fitting	Elbow fitting	Silencer
				
V70425-x5F	Modular sub-base side ported without pilot ports (Port 2+4). See table below	C02250618	C02470618	–
V70426-x5F	Modular sub-base side ported with pilot ports (Port 2+4). See table below	C02250618	C02470618	–
V70425-A5E	Modular sub-base bottom ported without pilot ports (Port 2+4) – G1/8	C02250618	C02470618	–
V70426-A5E	Modular sub-base bottom ported with side pilot ports (Port 2+4) – G1/8*	C02250618	C02470618	–
				
V70424-B5C	End plate kit. End ported – G1/4	C02250828	C02470828	T40C2800
				
V70431-A5F	End plate kit with 2 side ported valve stations without pilot ports – G1/4, G1/8	C02250618 (Ports 2 & 4) C02250828 (Ports 1, 3 & 5)	C02470618 (Ports 2 & 4) C02470828 (Ports 1, 3 & 5)	T40C2800 –
				
V70402-A50	2 Station fixed length manifold. Bottom ported	C02250618 (Ports 2 & 4)	C02470618 (Ports 2 & 4)	T40C2800
V70404-A50	4 Station fixed length manifold. Bottom ported	C02250828 (Ports 1, 3 & 5)	C02470828 (Ports 1, 3 & 5)	–
V70406-A50	6 Station fixed length manifold. Bottom ported	–	–	–
V70408-A50	8 Station fixed length manifold. Bottom ported	–	–	–
V70410-A50	10 Station fixed length manifold. Bottom ported	For all models listed on the left	–	–

* Pilot ports 12+14 on side.

Code x	Code y	Ports 2 & 4	Ports
A	A	G1/8	M5
6	–	Ø 6 mm PIF	M5

Connector plug - Ordered separately

I15 mm DIN EN 175301-803 (DIN 43 650) Table C

V10027-D00 250 V a.c./300 Vd.c.

Dimensions

V4155*3D-C3***
5/2 Single solenoid pilot valve
Air spring return

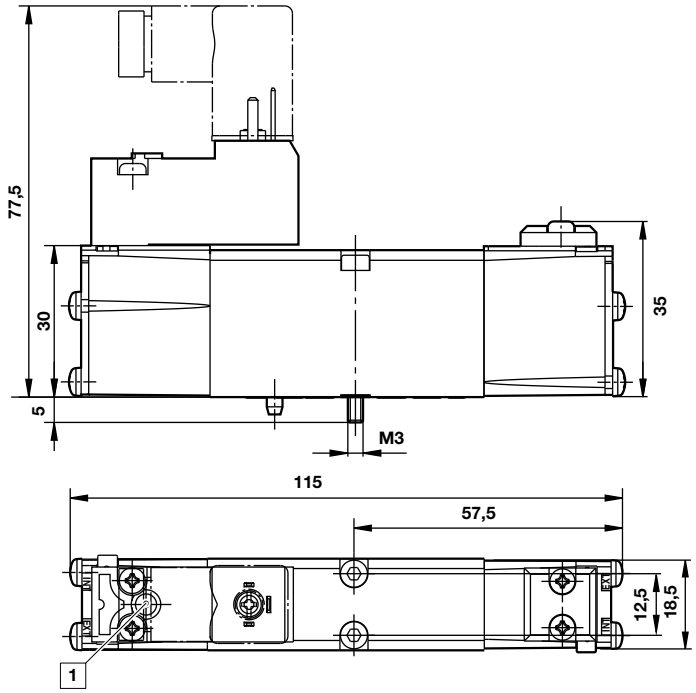

V4055**D-C3***
5/2 Single solenoid pilot valve
Mechanical (& air) spring valve

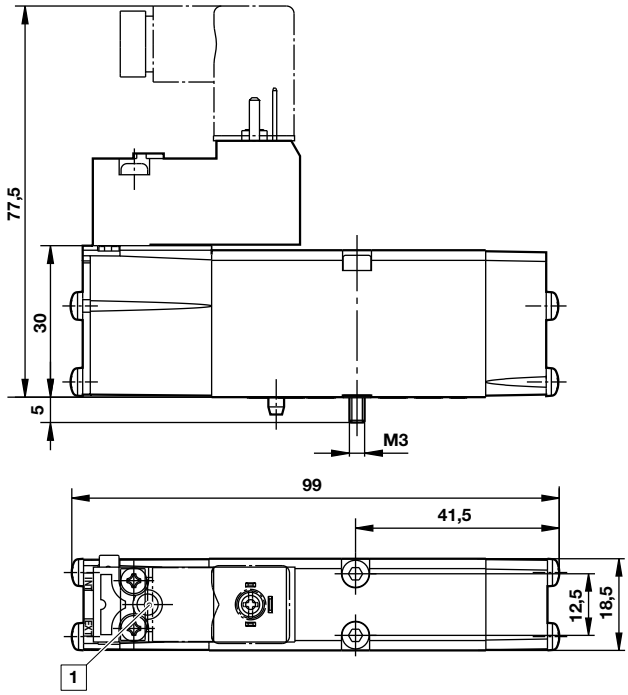

V4055**D-C3*** & V4155**D-C3***
5/2 Double solenoid pilot valve
V405***D-C3*** & V415***D-C3***
2x3/2 + 5/3 Double solenoid pilot valve

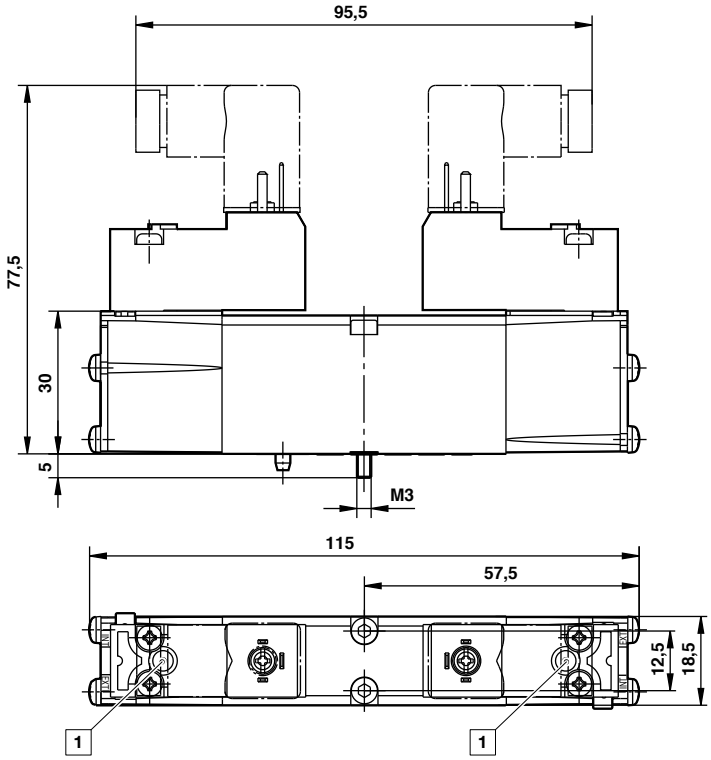

1 Manual override

MINI ISO VALVES

V40/V41 2 x 3/2, 5/2 and 5/3, Solenoid and pilot actuated, ISO 15407-1/VDMA 24 563, Size 18 mm

V415537A-X0090
5/2 Single air pilot valve

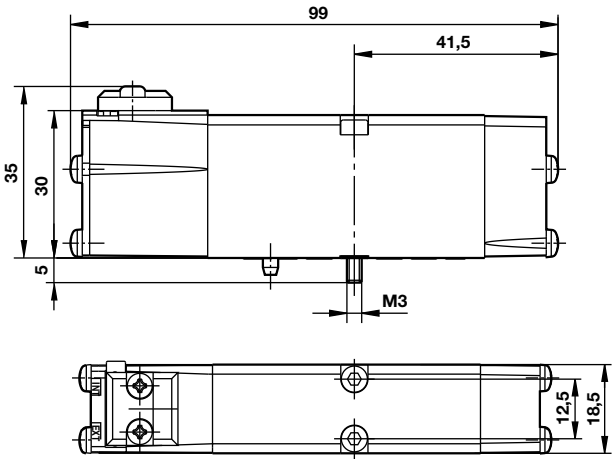

V405537A-X0090
5/2 Single air pilot valve
V405*33A-X00*0 & V415*33A-X00*0
2x3/2, 5/2 + 5/3 Double air pilot valve

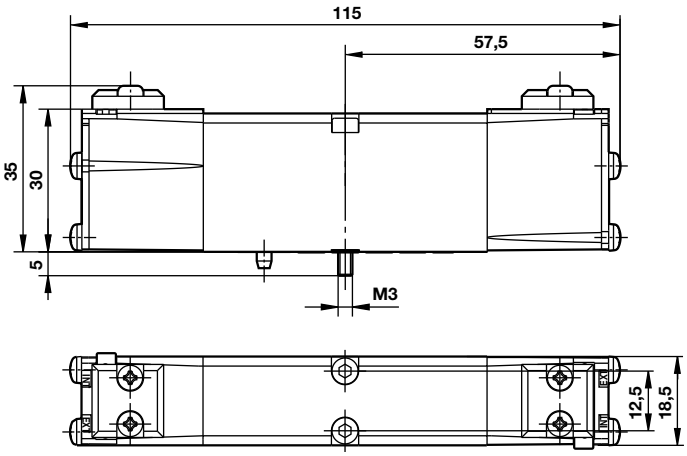

PRODUCT LINKS

Tubing...

For our comprehensive range of nylon, polyurethane and other tubing.

See page 202

PRODUCT LINKS

Exhaust air…

Due to the large combined exhaust from valve islands, it is vital that to comply with COSHH requirements silencers are fitted. In addition, they must also be maintained regularly to eliminate restriction of exhausting air.

See page 204

MINI ISO VALVES

V44/V45 Solenoid and pilot actuated, ISO 15407-1/VDMA 24 563, Size 26 mm

- High performance, compact design
- Flexible sub-base system
- Multipressure system capability
- Wide range of accessories
- Dual spool technology
  - V44 Glandless spool and sleeve (long life)
  - V45 Softseal spool (high flow)
- Valve exchange under pressure

Technical Data

Medium:
Compressed air, filtered to 40 µm, lubricated or non-lubricated

Operation:
V44: Glandless spool valve, solenoid pilot or air pilot actuated
V45: Softseal spool valve, solenoid pilot or air pilot actuated

Flow:

Softseal Function	l/min
2x3/2 NC	1100
5/2	1200
5/3	1150

Glandless	
5/2	900
5/3	900

Mounting:
Sub-base

Operating pressure:
See tables for individual details

Ambient temperature:
-15°C … +50°C
V44/V45 solenoid and V45 air pilot models
-15°C … +80°C
V44 air pilot models

Air supply must be dry enough to avoid ice formation at temperatures below +2°C

Models - 2 x 3/2 Solenoid pilot actuated softseal valves

Model	Function 2 x 3/2	Actuation/Return	Pilot supply	Pilot exhaust	Operating pressure (bar)	Pilot pressure (bar)	Flow (l/min)
V45AA11D-C313A	NC	Solenoid/Spring	Internal	Collected #	3 … 10	–	1000

# Pilot exhaust collected and exhausted via port 14.
NC = Normally closed.

Models - 5/2 Solenoid pilot actuated glandless and softseal valves

Model	Pilot supply	Pilot exhaust	Operator 14	Operator 12	Operating pressure (bar)	Pilot pressure (bar)	Sealing system	Flow (l/min)
V44A513D-C313A	Internal	Collected #	Solenoid	Air spring	1 … 10	–	Glandless	900
V44A517D-C313A	Internal	Collected #	Solenoid	Spring	1,6 … 10	–	Glandless	900
V45A517D-C313A	Internal	Collected #	Solenoid	Spring	2 … 10	–	Soft	1200
V44A511D-C313A	Internal	Collected #	Solenoid	Solenoid	2 … 10	–	Glandless	900
V45A511D-C313A	Internal	Collected #	Solenoid	Solenoid	2 … 10	–	Soft	1200

Pilot exhaust collected and exhausted via port 14.

Models - 5/3 Solenoid pilot actuated glandless and softseal valves

Model	Function	Pilot supply	Pilot exhaust	Operator 14	Operator 12	Operating pressure (bar)	Pilot pressure (bar)	Sealing system	Flow (l/min)
V44A611D-C313A	APB	Internal	Collected #	Solenoid	Solenoid	2 … 10	–	Glandless	900
V45A611D-C313A	APB	Internal	Collected #	Solenoid	Solenoid	2,5 … 10	–	Soft	1150
V44A711D-C313A	COE	Internal	Collected #	Solenoid	Solenoid	2 … 10	–	Glandless	900
V45A711D-C313A	COE	Internal	Collected#	Solenoid	Solenoid	2,5 … 10	–	Soft	1150

# Pilot exhaust collected and exhausted via port 14.
APB = All Ports Blocked, COE = Centre Open Exhaust

Voltage codes

Voltage	Coil code	Current
24 V d.c.	C313A	1,2 W

Other voltages available on request. Spare pilot valves are delivered with mounting screws.

Electrical details for solenoid operators

Voltage tolerances	-10%/+15%
Rating	100% Continuous duty
Inlet orifice	0,8 mm
Electrical connection	15 mm DIN EN 175301-803 (DIN 43 650) Table C
Manual override	Shrouded push button, spring return Convertible into lockable type with set-up kit, part no. V70532-K00
Protection class	IP 65 with sealed plug (ISO 6952) NEMA 4
Materials	PPS (body), FPM and NBR (seal)

MINI ISO VALVES

V44/V45 Solenoid and pilot actuated, ISO 15407-1/VDMA 24 563, Size 26 mm

Models - 5/2 Air pilot actuated glandless and softseal valves

Model	Operator 14	Operator 12	Operating pressure (bar)	Pilot pressure (bar)	Sealing system	Flow (l/min)
V44A537A-X0090	Air	Spring	-0,9 … 16	1,6 … 16	Glandless	900
V45A537A-X0090	Air	Spring	-0,9 … 10	2 … 10	Soft	1200
V44A533A-X0020	Air	Air	-0,9 … 16	2 … 16	Glandless	900
V45A533A-X0020	Air	Air	-0,9 … 10	2 … 10	Soft	1200

Models - 5/3 Air pilot actuated glandless and softseal valves

Model	Function	Operator 14	Operator 12	Operating pressure (bar)	Pilot pressure (bar)	Sealing system	Flow (l/min)
V45A633A-X0020	APB	Air	Air	-0,9 … 10	2,5 … 10	Soft	1150

APB = All Ports Blocked

Accessories

DIN EN 50 022 rail (1 m)	DIN-rail mounting kit	Blanking disc to modular sub-base	Manual override set-up kit	Blanking plate for unused station
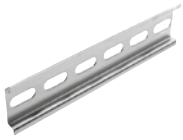				
V10009-C00 (35 x 7,5 mm)	V70531-KA0	V70522-K00 (Ports 1,3,5)	V70532-K00	V70500-KA0

Sandwich plates

Single pressure regulator plate	Double pressure regulator plate
	
V70527-KA1 (Port 1 reg.)	V70527-KA4 (Ports 2+4 reg.)

PRODUCT PLUS

Looking for long life valves?

For high cycling applications or extended life expectancy, select a glandless spool. Whilst having slightly lower flow rates, operating life is extended above soft seals, friction levels are lower and operation remains constant throughout the life of the valve.

PRODUCT LINKS

Connectors and cables

For a full selection of 15 mm DIN EN175301-803 Form C plugs and cables

See page 132

Bases

Accessories

Single station Model	Description	Straight fitting	Elbow fitting	Silencer
				
V70501-BAB	Single station side ported with pilot ports – G1/4	C02250828	C02470828	T40C2800

Modular sub-bases and end plates Model	Description	Straight fitting	Elbow fitting	Silencer
				
V70525-xAF	Modular sub-base side ported without pilot ports (Ports 2+4) – G1/4. See table below	C02250828	C02470828	–
V70526-xAF	Modular sub-base side ported with pilot ports (Ports 2+4) – G1/4*. See table below	C02250828	C02470828	–
V70525-BAE	Modular sub-base bottom ported without pilot ports (Ports 2+4) – G1/4	C02250828	C02470828	–
V70526-BAE	Modular sub-base bottom ported with side pilot ports (Ports 2+4) – G1/4*	C02250828	C02470828	–
				
V70524-CAC	End plate kit. End ported – G3/8	C02251038 (Ports 1,3 & 5)	C02471038 (Ports 1,3 & 5)	T40C3800
				
V70502-BA0	2 Station fixed length manifold. Bottom ported	C02250828 (Ports 2 & 4)	C02470828 (Ports 2 & 4)	T40C3800
V70504-BA0	4 Station fixed length manifold. Bottom ported	C02251038 (Ports 1, 3 & 5)	C02471038 (Ports 1, 3 & 5)	–
V70506-BA0	6 Station fixed length manifold. Bottom ported	–	–	–
V70508-BA0	8 Station fixed length manifold. Bottom ported	–	–	–
V70510-BA0	10 Station fixed length manifold. Bottom ported	For all models listed on the left	–	–

* Pilot ports 12+14 on side.

Code x	Ports 2 & 4	Ports 12/14
B	G1/4	M5
8	Ø 8 mm PIF	M5

x = Insert port type from table.

Connector plug - Ordered separately

I15 mm DIN EN 175301-803 (DIN 43 650) Table C

V10027-D00 250 V a.c./300 Vd.c.

MINI ISO VALVES

V44/V45 Solenoid and pilot actuated, ISO 15407-1/VDMA 24 563, Size 26 mm

Dimensions

V44A5*3D-C3***
5/2 Single solenoid pilot valve
Air spring return

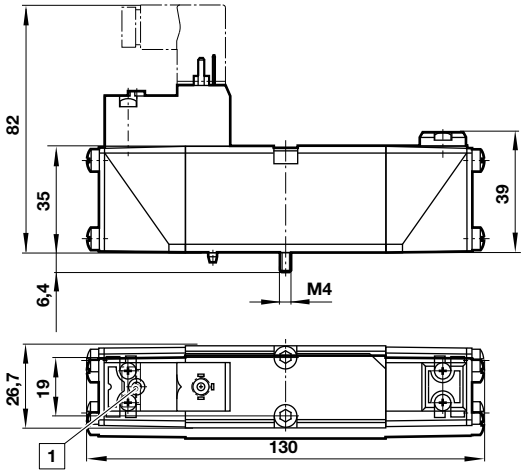

V44A5*7D-C3*** & V45A5*7D-C3***
5/2 Single solenoid pilot valve
Mechanical spring return

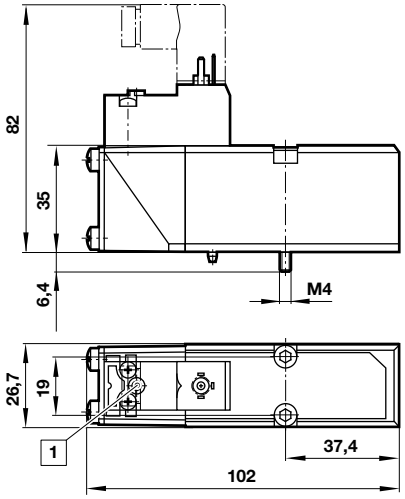

1 Manual override

V44A5**D-C3*** & V45A5**D-C3***
5/2 Double solenoid pilot valve
V44A***D-C3*** & V45A***D-C3***
2x3/2 + 5/3 Double solenoid pilot valve

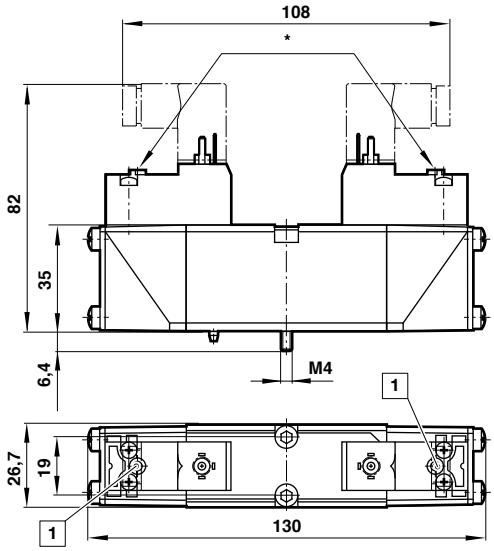

V44A537A-X00*0 & V45A537A-X00*0
5/2 Single air pilot valve

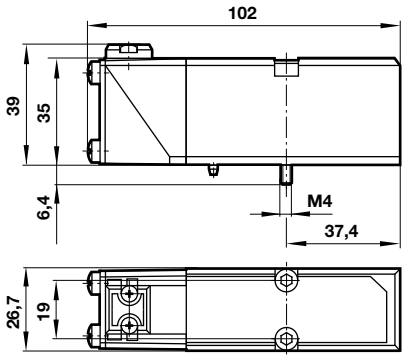

V44A*33A-X00*0 & V45A*33A-X00*0
2 x 3/2, 5/2 + 5/3 Double air pilot valve

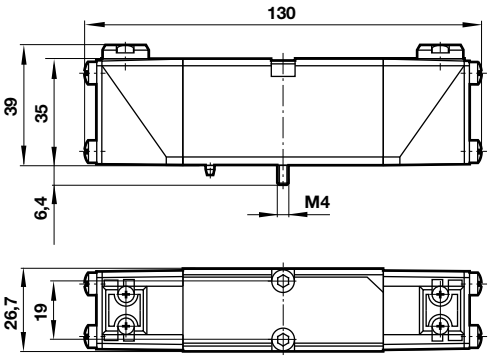

PRODUCT LINKS

Tubing...

For our comprehensive range of nylon, polyurethane and other tubing.

See page 202

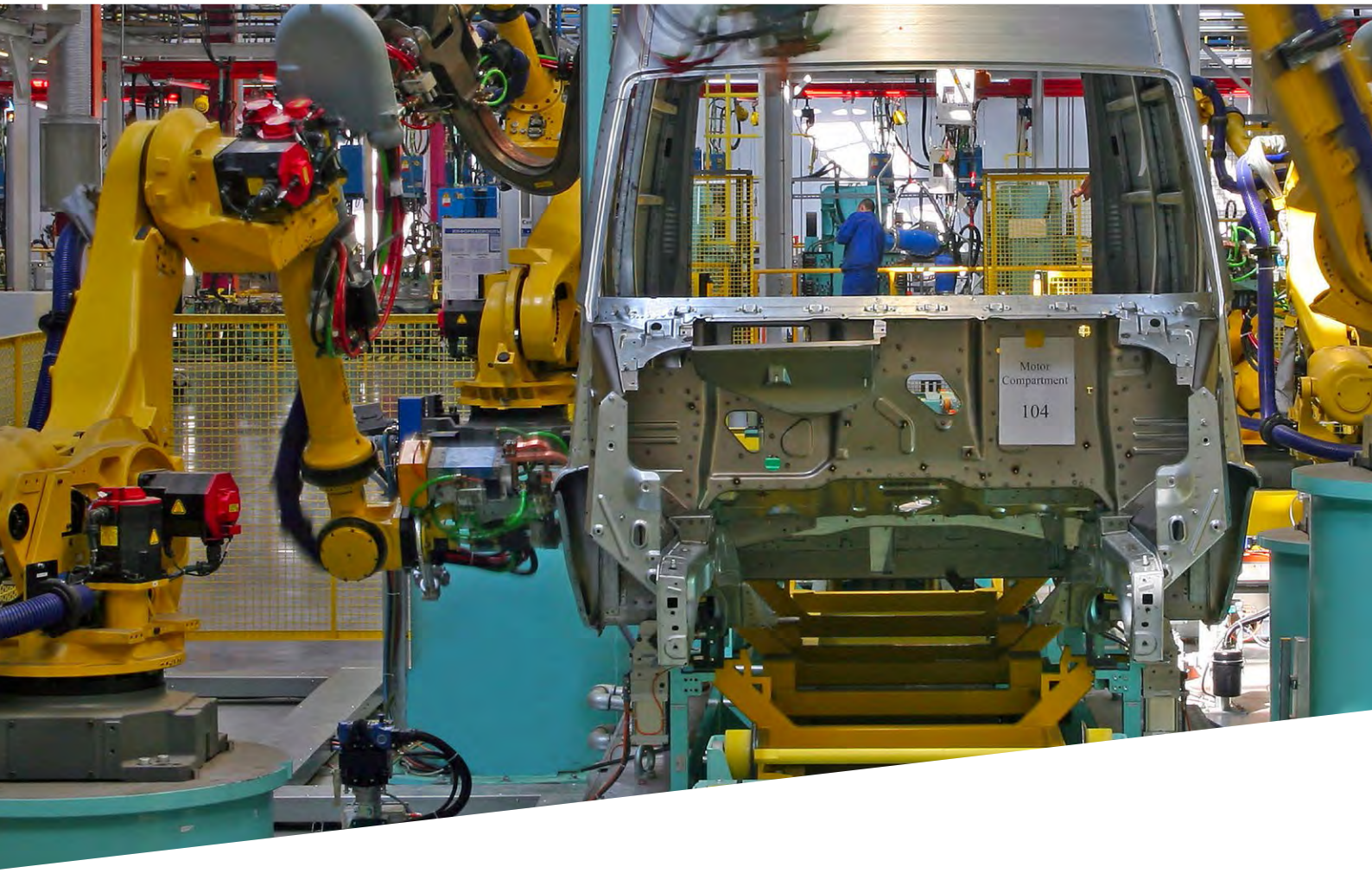

Solutions for
Safety Technology

- Over 50 years experience in safety applications
- Safety applications DIN EN ISO 13849
- Competent and professional consulting and system design of safety controls
- Very high B10 Values
- DGUV certified self-monitored safety valves
- Important safety features such as:
  - Safe exhaust
  - Safe position
  - Safe stop
  - Reliable reversing
  - Safely limited speed and more

Engineering GREAT Solutions

IMI NORGREN

IMI HERION

Find out more
www.imi-precision.com

For further information, visit **www.imi-precision.com** and use the new improved search function. If you cannot see the option you require please contact us.

IMI Precision Engineering

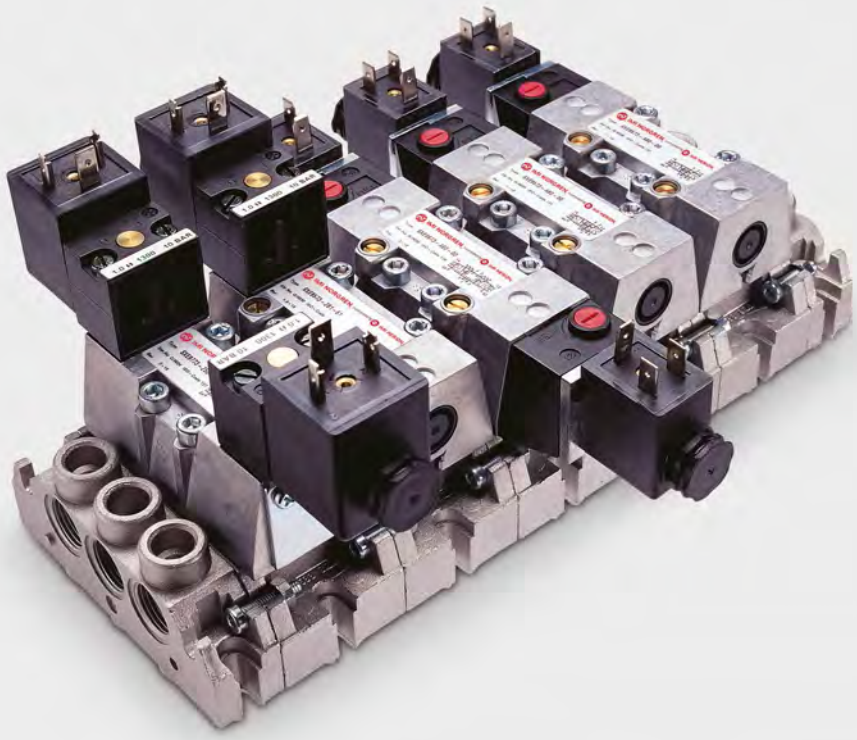

Integral flow regulators

ISO★STAR

Glandless valves

SXE series and SXP series

The ISO★STAR range now uses an aluminium spool but is still hugely valued. In many industries, it has effectively replaced Beech products with a more up-to-date, more cost-effective solution. Dimensionally interchangeable with other systems conforming to ISO, IMI Precision Engineering is a pioneer of the low friction, fast-switching, long-life glandless spool.

- Three sizes of valve, with or without integral flow regulators, 5/2 and 5/3 function, with standard or CNOMO solenoids or air pilots and single station or manifold bases
- Hard-anodised, low friction aluminium spool and sleeve offers long life, and constant performance from start-up in all kinds of environments. Copes with many airline contaminants
- Fast switching times coupled with low power solenoids, perfect in high cycling applications

Trouble free life!

Engineering GREAT Solutions

Find out more
www.imi-precision.com

IMI NORGREN

IMI Precision Engineering

For further information, visit **www.imi-precision.com** and use the new improved search function. If you cannot see the option you require please contact us.

SOLENOID & PILOT ACTUATED SPOOL VALVES

ISO★STAR Sub-base, 5/2 & 5/3, ISO #1 to ISO #3

- Specially coated glandless spool and sleeve for long trouble-free life
- Integral flow regulators available on ISO #1 and #2 sizes
- Low power solenoids feature manual override as standard
- Wide range of sub-bases and accessories
- Conforms to ISO 5599-1

Technical Data

Medium:
Compressed air, filtered, lubricated, non lubricated

Operating pressure:
Maximum 16 bar, see table for individual details

Flow:
ISO #1 1230 l/min
ISO #2 2450 l/min
ISO #3 4400 l/min

Ambient temperature:
-15°C … +50°C solenoid models
-15°C … +80°C pilot models

Air supply must be dry enough to avoid ice formation at temperatures below +2°C

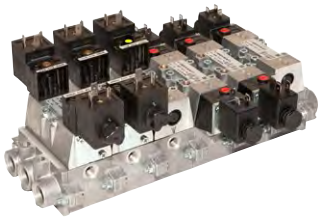

Models - Solenoid pilot actuated valves (without solenoid coils)

End solenoid models		CNOMO solenoid models		Size	Function	Mid position	Actuation	Flow regulator
Model	**Operating pressure (bar)**	**Model**	**Operating pressure (bar)**					
SXE 9573-A81-00K	1,8 … 10	–	–	ISO #1	5/2	–	Sol/Spring	Built-in
–	–	SXE 0573-Z50-81K	2 … 16	ISO #1	5/2	–	Sol/Sol	–
SXE 0573-A60-00K	2 … 10	–	–	ISO #1	5/2	–	Sol/Sol	Built-in
SXE 9673-A60-00K	2 … 10	–	–	ISO #1	5/3	APB	Sol/Sol	Built-in
SXE 9773-A60-00K	2 … 10	–	–	ISO #1	5/3	COE	Sol/Sol	Built-in
SXE 9873-A60-00K	2 … 10	–	–	ISO #1	5/3	COP	Sol/Sol	Built-in
SXE 9574-A81-00K	1,8 … 10	–	–	ISO #2	5/2	–	Sol/Spring	Built-in
–	–	SXE 0574-Z50-81K	2 … 16	ISO #2	5/2	–	Sol/Sol	–
SXE 0574-A60-00K	2 … 10	–	–	ISO #2	5/2	–	Sol/Sol	Built-in
SXE 9674-A60-00K	2 … 10	–	–	ISO #2	5/3	APB	Sol/Sol	Built-in
SXE 9774-A60-00K	2 … 10	–	–	ISO #2	5/3	COE	Sol/Sol	Built-in
SXE 9874-A60-00K	2 … 10	–	–	ISO #2	5/3	COP	Sol/Sol	Built-in
SXE 9575-A71-00K	1,8 … 10	–	–	ISO #3	5/2	–	Sol/Spring	–
SXE 0575-A50-00K	2 … 10	SXE 0575-Z50-81K	2 … 16	ISO #3	5/2	–	Sol/Sol	–
SXE 9675-A50-00K	2 … 10	–	–	ISO #3	5/3	APB	Sol/Sol	–
SXE 9775-A50-00K	2 … 10	–	–	ISO #3	5/3	COE	Sol/Sol	–
SXE 9875-A50-00K	2 … 10	–	–	ISO #3	5/3	COP	Sol/Sol	–

APB = All Ports Blocked, COE = Centre Open Exhaust, COP = Centre Open Pressure. Service kits not available for these valves.
Manual override on end solenoid models: Push to operate spring return, lockable.
Manual override on CNOMO solenoid models (-81/***): Push to operate spring return.
For Valve complete with solenoid coil remove K and replace with '-***' where *** is taken from the correct coil table below

Voltage Codes and spare coils

Standard Coils

22 mm Coil with connector interface acc. to Industrial Standard		
Model	**Code**	**Power inrush/hold**
QM/48/13J/21	13J	2 W
QM/48/18J/21	18J	4/2,5 VA
QM/48/19J/21	19J	6/5 VA

22 mm Coil with connector interface acc. to DIN 43650 table B		
Model	**Code**	**Power inrush/hold**
V10626-A13L	13L	2 W
V10626-A18L	18L	4/2,5 VA
V10626-A19L	19L	6/5 VA

CNOMO Coils

30 mm Coil with connector interface acc. to DIN 43650 table A - 10 bar option			
Model	**Code**	**Power inrush/hold**	**Voltage**
V10633-A33N	33N	4 W	24 V d.c.
V10633-A88N	88N	8 VA	110/120 V a.c.
V10633-A89N	89N	8 VA	230 V a.c.

30 mm Coil with connector interface acc. to DIN 43650 table A - 16 bar option			
Model	**Code**	**Power inrush/hold**	**Voltage**
V10633-A23N	23N	1,5 W	24 V d.c.
V10633-A28N	28N	2 VA	110/120 V 50/60 Hz
V10633-A29N	29N	3 VA	220/240 V 50/60 Hz

Connector plugs - ordered separately

Industrial standard 22 mm 2-pole + PE	22 mm, EN 175301-803 (DIN 43650 B) Form B 2-pole + PE	30 mm, EN 175301-803 (DIN 43650 B) Form A 2-pole + PE
		
0657868000000000	0680003000000000	0570275000000000

Electrical details for end & CNOMO solenoid operators

Voltage tolerance:	±10%
Rating:	100% E.D.
Inlet orifice:	1,0 mm
Electrical connection:	Corresponding to chosen coil. See voltage code tables
Solenoid coil	May be rotated at 90° intervals
Protection class:	IP 65 with sealed plug (ISO 6952)

SOLENOID & PILOT ACTUATED SPOOL VALVES

ISO★STAR Sub-base, 5/2 & 5/3, ISO #1 to ISO #3

Models - Air pilot actuated valves

Model	Size	Function	Mid position	Actuation	Flow regulator	Operating pressure (bar)	kg
SXP 9573-170-00	ISO #1	5/2	–	Pilot/Spring	–	-0,9 … 16	0,21
SXP 0573-170-00	ISO #1	5/2	–	Pilot/Pilot	–	-0,9 … 16	0,30
SXP 9673-180-00	ISO #1	5/3	APB	Pilot/Pilot	Built-in	-0,9 … 16	0,25
SXP 9574-170-00	ISO #2	5/2	–	Pilot/Spring	–	-0,9 … 16	0,45
SXP 0574-170-00	ISO #2	5/2	–	Pilot/Pilot	–	-0,9 … 16	0,50
SXP 9674-180-00	ISO #2	5/3	APB	Pilot/Pilot	Built-in	-0,9 … 16	0,58
SXP 9575-170-00	ISO #3	5/2	–	Pilot/Spring	–	-0,9 … 16	0,72
SXP 0575-170-00	ISO #3	5/2	–	Pilot/Pilot	–	-0,9 … 16	0,72
SXP 9675-170-00	ISO #3	5/3	APB	Pilot/Pilot	–	-0,9 … 16	0,80

APB = All Ports Blocked

Bases

Accessories

VDMA 24345 sub-bases

Model	Description	Size	Straight fitting	Elbow fitting	Silencer
					
M/P19126 (G1/4)	Form A - Side ported	ISO 1	C02250828	C02470828	T40C2800
M/P19132 (G3/8)	Form A - Side ported	ISO 2	C02251038	C02471038	T40C3800
M/P19138 (G1/2)	Form A - Side ported	ISO 3	C02251248	C02471248	T40C4800
					
CQM/22152/3/21	Form C - Manifold	ISO 1	C02250828	C02470828	–
CQM/22253/3/21	Form C - Manifold	ISO 2	C02251038	C02471038	–
CQM/22354/3/21	Form C - Manifold	ISO 3	C02251248	C02471248	–
					
CQM/22152/3/22	Form D - End plates	ISO 1	C02251038	C02471038	T40C3800
CQM/22253/3/22	Form D - End plates	ISO 2	C02251248	C02471248	T40C4800
CQM/22354/3/22	Form D - End plates	ISO 3	–	–	T40C8800

Universal base options

Model	Description	Size	Straight fitting	Elbow fitting	Silencer
					
CQM/22152/3/27 (G1/4)	Modular base	ISO 1	C02250828	C02470828	–
CQM/22253/3/27 (G3/8)	Modular base	ISO 2	C02251038	C02471038	–
					
CQM/22152/3/31 (G3/8)	End plate, side ports open	ISO 1	C02251038	C02471038	T40C3800
CQM/22253/3/31 (G1/2)	End plate, side ports open	ISO 2	C02251248	C02471248	T40C4800

Dimensions

Single end solenoid models

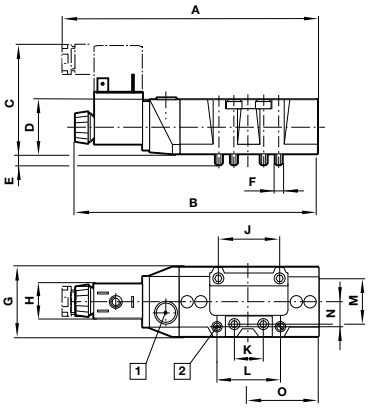

1 Manual override
2 Flow regulators

	ISO 1	ISO 2	ISO 3
A	154	181	207,5
B	146	173	197
C	66	71	72
D	33	42	43
E	7,5	8	11,5
F	M5	M6	M8
G	42	55	62,5
H	22/30	22/30	22/30
J	36	48	64
K	18	24	32
L	38	48	–
M	28	38	48
N	15	20	–
O	42	53	65,4

Double end solenoid models

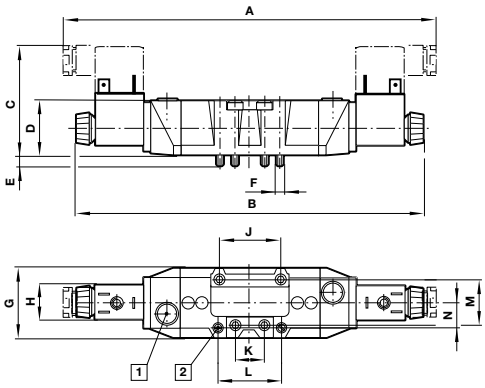

1 Manual override
2 Flow regulators

	ISO 1	ISO 2	ISO 3
A	222	255	284
B	204	239	263
C	65	71	72
D	33	42	43
E	7,5	8	11,5
F	M5	M6	M8
G	42	55	62,5
H	22/30	22/30	22/30
J	36	48	64
K	18	24	32
L	38	48	–
M	28	38	48
N	15	20	–

Single and double pilot models

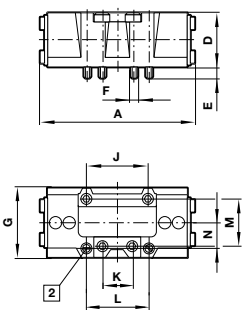

2 Flow regulators

	ISO 1		ISO 2		ISO 3	
	Single	Double	Single	Double	Single	Double
A	88	92,5	112	119	135,5	140 (142)
D	33	33	42	42	43	43
E	7,5	7,5	8	8	11,5	11,5
F	M5	M5	M6	M6	M8	M8
G	42	42	55	55	62,5	62,5
J	36	36	48	48	64	64
K	18	18	24	24	32	32
L	38	38	48	48	–	–
M	28	28	38	38	48	48
N	15	15	20	20	–	–
O	42		53		65,5	

( ) for 5/3 way valves.

Double CNOMO solenoid valves

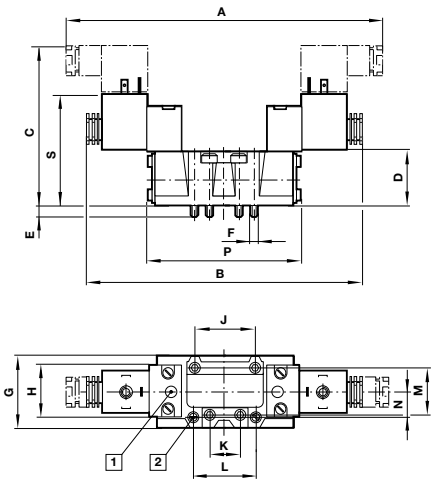

1 Manual override
2 Flow regulators

	ISO 1	ISO 2	ISO 3
A	191	208	231
B	171	189	212
C	89	107	108
D	33	42	43
E	7,5	8	11,5
F	M5	M6	M8
G	42	55	62,5
H	32	32	32
J	36	48	64
K	18	24	32
L	38	48	–
M	28	38	48
N*	15	20	–
P	92,5	119	140 (142)
S	62	71	78,5

( ) for 5/3 way valves.

SOLENOID & PILOT ACTUATED SPOOL VALVES

UM/22000 Sub-base 5/2 and 5/3, ISO #4

- Sub-base mounted, ISO 5599-1
- Steel reinforced main seals
- 16 bar and 10 bar CNOMO solenoid pilots with locking or non-locking manual override
- Low power coils (1,5W)
- Wide range of sub-bases and accessories

Technical Data

Medium:
Compressed air, 40 µm filtered, lubricated or non-lubricated

Operating pressure:
Solenoid pilot actuated valves: 10 bar
Air pilot actuated valves and solenoid pilot actuated valves:16 bar

Flow:
5660 l/min

Ambient temperature:
-15°C … +50°C solenoid models
-15°C … +80°C pilot models

Air supply must be dry enough to avoid ice formation at temperatures below +2°C

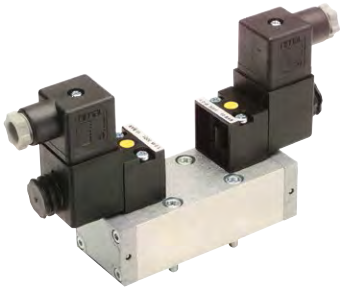

Models - 5/2 Solenoid pilot actuated valves – 10 bar models

Model 22 mm industrial 24vDC coil	ISO size	Operator/return	Pilot supply	Flow (l/min)	Operating pressure (bar)	Pilot pressure (bar)
UM/22456/172/61/13J	4	Solenoid/spring and air	Internal	5660	2,5 … 10	–
UM/22456/123/61/13J	4	Solenoid/ solenoid	Internal	5660	2 … 10	–

Models - 5/3 Solenoid pilot actuated valves – 10 bar models

Model 22 mm industrial 24vDC coil	ISO size	Function	Operator/return	Pilot supply	Flow (l/min)	Operating pressure (bar)
UM/22456/6123/61/13J	4	APB	Solenoid/ solenoid	Internal	5490	2,8 … 10

Function: APB = All Ports Blocked

Voltage codes and spare coils for 10 bar solenoid models

22 mm Coil with connector interface acc. to Industrial Standard			22 mm Coil with connector interface acc. to EN 175 301-803, form B		
Model	Code	Power inrush/hold	Model	Code	Power inrush/hold
QM/48/13J/21	13J	2 W	V10626-A13L	13L	2 W
QM/48/18J/21	18J	4/2,5 VA	V10626-A18L	18L	4/2,5 VA
QM/48/19J/21	19J	6/5 VA	V10626-A19L	19L	6/5 VA

Electrical details for solenoid operators

Voltage tolerance:	±10%
Rating:	100% E.D.
Inlet orifice:	1,0 mm
Electrical connection:	Corresponding to chosen coil: EN 175301-803 - Form A, 30 mm EN 175301-803 - Form B, 22 mm Industrial Standard, 22 mm
Solenoid coil	May be rotated at 90° intervals
Protection class:	IP 65 with sealed plug

Bases - VDMA 24 345 sub-bases

	Form A Side ported	Form C Manifold	Form D End Plates
			
ISO#4	M/P19144 (G3/4)	CQM/22456/3/21	CQM/22456/3/22

Dimensions

5/2 Single solenoid valve

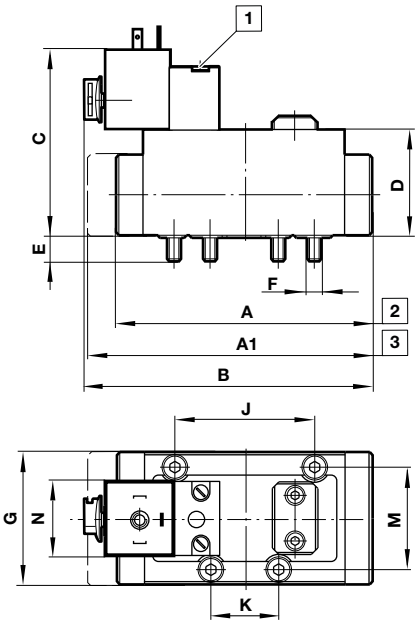

1 Manual override
2 Model …/172
3 Model …/22, …/122

	A	A1	B	C	D	E	F	G	J	K	M	N*
ISO#4	177	187	152	83	45	14	M8	75	80	40	58	22 or 30

* Illustrated with 30 mm coil.

5/2 and 5/3 Double solenoid valves

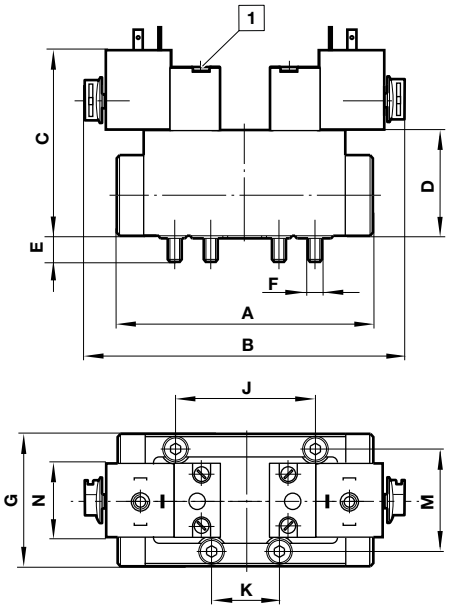

1 Manual override

	A	B	C	D	E	F	G	J	K	M	N*
ISO#4	177	140	83	45	14	M8	75	80	40	58	22 or 30

* Illustrated with 30 mm coil.

V60 Series
in-line valves

The IMI Norgren V60 series is one of the industry's largest range of in-line valves, with thousands of product combinations.

Offering high flow together with a compact body size, V60 series valves can flow up to twice the value of older styles of similar spool valves. Not just simple – the series also includes twin 3/2 functions in one body.

- Four sizes of valve, flowing 500 to 4,500 lit/min coupled with compact body size and a number of valve functions, to meet most requirements
- Quickly replaceable solenoid coils, choice of manual override and option of collected exhaust
- Manifold base system allows assembly of valves for more complex applications. Valve types can be mixed on one assembly and piped with multi-pressures

Engineering GREAT Solutions

Find out more
www.imi-precision.com

IMI NORGREN

IMI Precision Engineering

For further information, visit **www.imi-precision.com** and use the new improved search function. If you cannot see the option you require please contact us.

IN-LINE VALVES

V60 … 63 3/2, 2x3/2, 5/2 & 5/3, G1/8 … G1/2

- 3/2, 5/2, 5/3 and 2 x 3/2 solenoid actuated valves
- G1/8 … G1/2
- Proven sealing system maintenance-free
- Different manual override options available
- Manifold system for easy assembly

Technical Data

Medium:
Compressed air, filtered, lubricated or non-lubricated

Ambient temperature:
-10°C … +50°C
Air supply must be dry enough to avoid ice formation at temperatures below +2°C

Models - Solenoid actuated

Actuation	G1/8	Operating Pressure (bar)	G1/4	Operating Pressure (bar)	G3/8	Operating Pressure (bar)	G1/2	Operating Pressure (bar)
Flow (l/min)								
3/2 & 5/2	750	–	1300	–	2600	–	4500	–
2x3/2 & 5/3	500	–	950	–	1900	–	2200	–
3/2 Valves								
Sol/Air Spring NC	V60A413A-A2000	2 … 10	V61B413A-A2000	2 … 10	V62C413A-A2000	2 … 10	V63D413A-A2000	3 … 10
Sol / Spring NC	V60A417A-A2000	2 … 10	V61B417A-A2000	2 … 10	V62C417A-A2000	2 … 10	V63D417A-A2000	2 … 10
Sol/Sol	V60A411A-A3000	1,5 … 10	V61B411A-A3000	1,5 … 10	V62C411A-A3000	1,5 … 10	V63D411A-A3000	2 … 10
2 x 3/2 Valves								
Sol/Spring NC	V60AA11A-A2000	2 … 10	V61BA11A-A2000	2 … 10	V62CA11A-A2000	2 … 10	–	–
5/2 Valves								
Sol/Air Spring	V60A513A-A2000	2 … 10	V61B513A-A2000	2 … 10	V62C513A-A2000	2 … 10	V63D513A-A2000	3 … 10
Sol / Spring	V60A517A-A2000	3 … 10	V61B517A-A2000	3 … 10	V62C517A-A2000	3 … 10	V63D517A-A2000	3 … 10
Sol/Sol	V60A511A-A3000	1,5 … 10	V61B511A-A3000	1,5 … 10	V62C511A-A3000	1,5 … 10	V63D511A-A3000	2 … 10
5/3 Valves								
Sol/Sol APB	V60A611A-A3000	3 … 10	V61B611A-A3000	3 … 10	V62C611A-A3000	3 … 10	V63D611A-A3000	3 … 10
Sol/Sol COE	V60A711A-A3000	3 … 10	V61B711A-A3000	3 … 10	V62C711A-A3000	3 … 10	V63D711A-A3000	3 … 10
Sol/Sol COP	V60A811A-A3000	3 … 10	V61B811A-A3000	3 … 10	V62C811A-A3000	3 … 10		
Accessories								
Straight Fitting	C02250618	–	C02250828	–	C02251038	–	C02251248	–
Elbow Fitting	C02470618	–	C02470828	–	C02471038	–	C02471248	–
Silencer	T40C1800	–	T40C2800	–	T40C3800	–	T40C4800	–
Basic Plug	M/P19063	–	M/P19063	–	M/P19063	–	M/P19063	–

Note: For Manual Override Options - Digit 10 is :- 2 - Turn & Lock (Standard - Sol/Spring), 3 Push Only (Standard - Sol/Sol).
Note: The above are for valves without coils - for coils to be included remove 000 and replace with Coil Code from the tables below.
Note: APB = All Ports Blocked, COE = Centre Open Exhaust, COP = Centre Open Pressure, NC = Normally Closed.

PRODUCT LINKS

Connectors and cables

For a full selection of 22 mm Industrial Standard or DIN EN175301-803 Form B plugs and cables

See page 132

IN-LINE VALVES

V60 … 63 3/2, 2x3/2, 5/2 & 5/3, G1/8 … G1/2

Voltage codes and spare coils

Model	Voltage	Coil code	Power inrush/hold
			
22 mm coil for connector interface acc. to industrial standard			
QM/48/13J/21	24 V d.c	13J	2 W
QM/48/18J/21	110/120V 50/60Hz	18J	4/2,5 VA
QM/48/19J/21	220/240 V 50/60 Hz	19J	6/5 VA
22 mm coil for connector interface acc. EN 175 301-803, form B			
V10626-A13L	24 V d.c	13L	2 W
V10626-A18L	110/120 V 50/60 Hz	18L	4/2,5 VA
V10626-A19L	220/240 V 50/60 Hz	19L	6/5 VA

Connector plugs must be ordered separately. Other voltages available, please contact us.

Connector plugs - ordered separately

Industrial standard 22 mm 2-pole + PE	22 mm, EN 175301-803 (DIN 43650 B) Form B 2-pole + PE
	
0657868000000000 12 … 250 V a.c./d.c.	0680003000000000 12 … 250 V a.c./d.c.
0680000000000000 15 … 30 V DC; LED, surge surpression	0664811000000000 15 … 30 V DC; LED, surge surpression
M/P24121/3 150 … 250 V a.c.; glim lamp	0664812000000000 150 … 250 V a.c.; glim lamp

Note: Light emitting gaskets can not be used.

Electrical details for solenoid operators

Voltage tolerance:	± 10%	
Rating:	100% continuous duty	
Inlet orifice:	0,8 mm	
Electrical connection (corresponding to choosen coil):	EN 175301-803 - Form B, 22 mm	
	Industrial Standard, 22 mm	
Solenoid:	4 x 90° rotable	
Manual override:	Without	# =1
	Push and turn to lock	# = 2
	Push only (not lockable)	# = 3
Protection class:	IP 65 (with sealed plug)	

Models - Pilot actuated

Actuation	G1/8	Operating pressure (bar)	Pilot pressure external (bar)	G1/4	Operating Pressure (bar)	Pilot pressure external (bar)	G3/8	Operating pressure (bar)	Pilot pressure external (bar)	G1/2	Operating pressure (bar)	Pilot pressure external (bar)
Flow (l/min)												
3/2 & 5/2	750	–	–	1300	–	–	2600	–	–	4500	–	–
3/2 Valves												
Air/Spring NC	V60A4D7A-XA090	-0,9 … 10	2,5 … 10	V61B4D7A-XA090	-0,9 … 10	2,5 … 10	V62C4D7A-XA090	-0,9 … 10	2,5 … 10	V63D4D7A-XA090	-0,9 … 16	3 … 16
Air/Air NC	V60A4DDA-XA020	-0,9 … 10	1,5 … 10	V61B4DDA-XA020	-0,9 … 10	1,5 … 10	V62C4DDA-XA020	-0,9 … 10	1,5 … 10	V63D4DDA-XA020	-0,9 … 16	1,5 … 16
5/2 Valves												
Air/Spring	V60A5D7A-XA090	-0,9 … 10	2,5 … 10	V61B5D7A-XA090	-0,9 … 10	2,5 … 10	V62C5D7A-XA090	-0,9 … 10	2,5 … 10	V63D5D7A-XA090	-0,9 … 16	3 … 16
Air/Air	V60A5DDA-XA020	-0,9 … 10	1,5 … 10	V61B5DDA-XA020	-0,9 … 10	1,5 … 10	V62C5DDA-XA020	-0,9 … 10	1,5 … 10	V63D5DDA-XA020	-0,9 … 16	1,5 … 16
Accessories												
Straight Fitting	C02250618	–	–	C02250828	–	–	C02251038	–	–	C02251248	–	–
Elbow Fitting	C02470618	–	–	C02470828	–	–	C02471038	–	–	C02471248	–	–
Silencer	T40C1800	–	–	T40C2800	–	–	T40C3800	–	–	T40C4800	–	–
Straight Fitting - Pilot Port	C02250618	–	–	C02250618	–	–	C02250618	–	–	C02250618	–	–
Elbow Fitting - Pilot Port	C02470618	–	–	C02470618	–	–	C02470618	–	–	C02470618	–	–

Note: NC = Normally Closed

Dimensions

3/2 Sol/Spring V60-V62

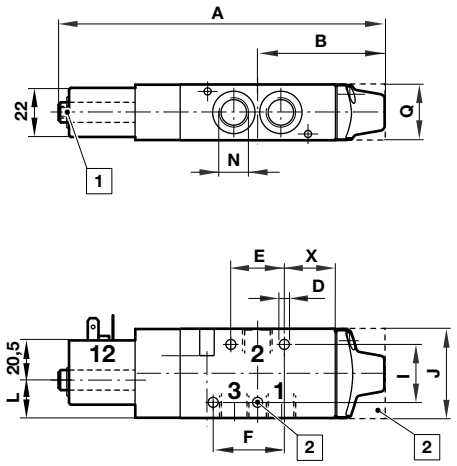

3/2 Sol/Spring V63

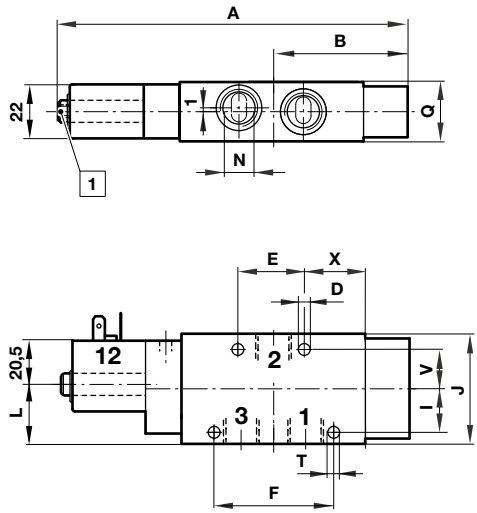

1 Collected pilot exhaust (M5)
2 V62: Central mounting hole (left hole is not applicable) and square end cover

Model	A	B	Ø D	E	F	I	J	L	N	O	Q	Ø T	V	X
V60	125	45	4,5	18	25	26	35	12	G1/8	–	22	–	–	19
V61	147	57,5	4,5	24	32	26	40	17	G1/4	–	25	–	–	23
V62	166,5	70	4,5	26	–	36	55	32	G3/8	–	34	–	23	30
V63	197	87,5	7	46	75	26	65	38	G1/2	–	35	5,5	–	36

3/2 Sol/Air Spring V60-V62

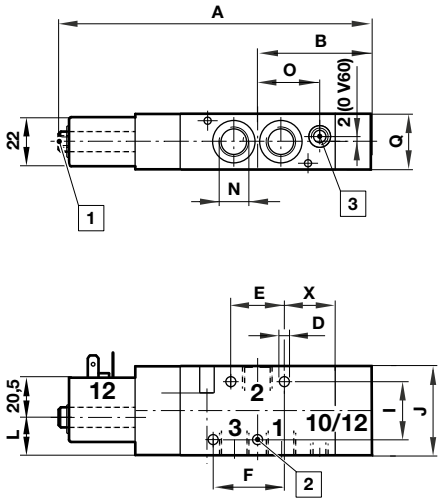

3/2 Sol/Air Spring V63

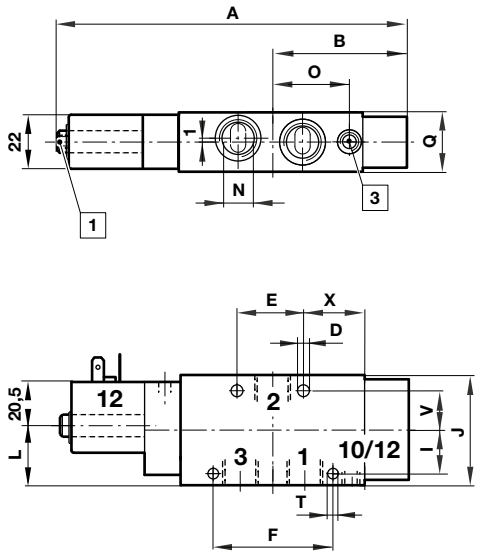

1 Collected pilot exhaust (M5)
2 V62: Central mounting hole (left hole is not applicable) and square end cover
3 External pilot port, M5 (V60 & V61), G1/8

Model	A	B	Ø D	E	F	I	J	L	N	O	Q	Ø T	V	X
V60	116,5	37	4,5	18	25	26	35	12	G1/8	–	22	–	–	19
V61	132,5	43	4,5	24	32	26	40	17	G1/4	–	25	–	–	23
V62	147	50,5	4,5	26	–	36	55	32	G3/8	–	34	–	–	30
V63	190	80	7	46	75	26	65	38	G1/2	–	35	5,5	23	36

IN-LINE VALVES

V60 … 63 3/2, 2x3/2, 5/2 & 5/3, G1/8 … G1/2

3/2 Sol/Sol V60-V62

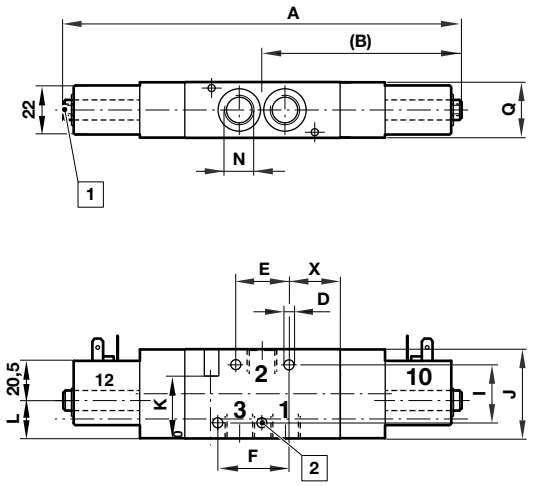

3/2 Sol/Sol V63

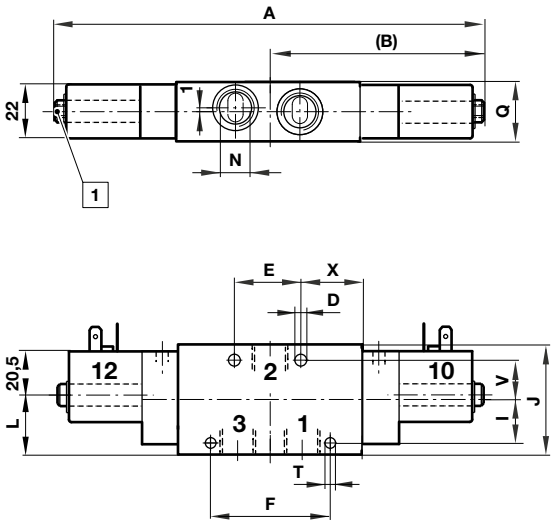

1 Collected pilot exhaust (M5)
2 V62: Central mounting hole (left hole is not applicable) and square end cover

Model	A	B	Ø D	E	F	I	J	L	N	Q	Ø T	V	X
V60	116,5	37	4,5	18	25	26	35	12	G1/8	22	–	–	19
V61	132,5	43	4,5	24	32	26	40	17	G1/4	25	–	–	23
V62	147	50,5	4,5	26	–	36	55	32	G3/8	34	–	–	30
V63	190	80	7	46	75	26	65	38	G1/2	35	5,5	23	36

IN-LINE VALVES

V60 … 63 3/2, 2x3/2, 5/2 & 5/3, G1/8 … G1/2

5/2 Sol/Spring V60-V62

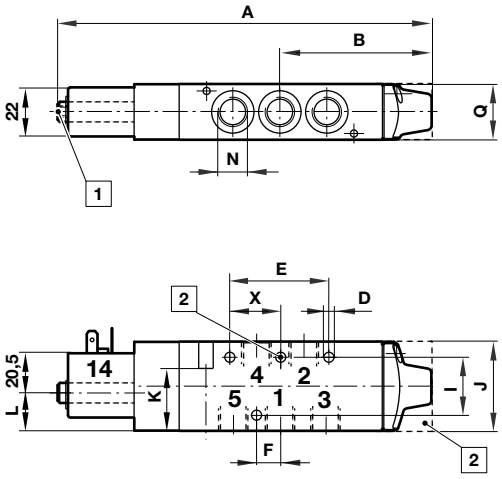

5/2 Sol/Spring V63

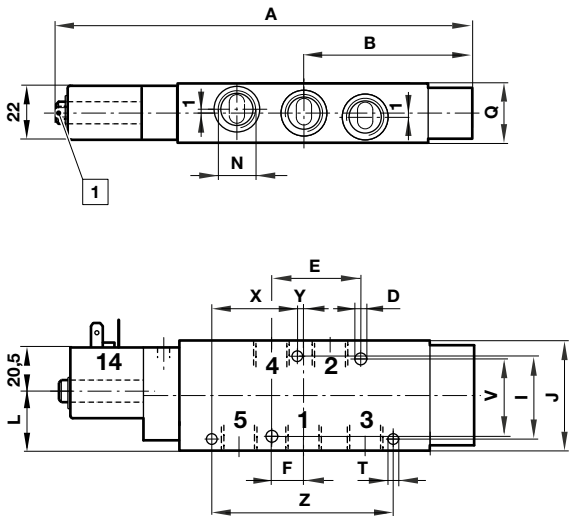

1 Collected pilot exhaust (M5)
2 V62: Central mounting hole (left hole is not applicable) and square end cover

Model	A	B	Ø D	E	F	I	J	K	L	N	O	Q	Ø T	V	X	Y	Z
V60	140	52,5	4,5	33,5	8	26	35	28	12	G1/8	–	22	–	–	17	–	–
V61	167	67,5	4,5	44	10	26	40	28	17	G1/4	–	25	–	–	22	–	–
V62	191	82	4,5	–	12	36	55	44	32	G3/8	–	34	–	–	26	–	–
V63	235	106,5	7	60	19	52	65	–	38	G1/2	–	35	5,5	46	57,5	3	115

IN-LINE VALVES

V60 … 63 3/2, 2x3/2, 5/2 & 5/3, G1/8 … G1/2

5/2 Sol/Air Spring V60-V62

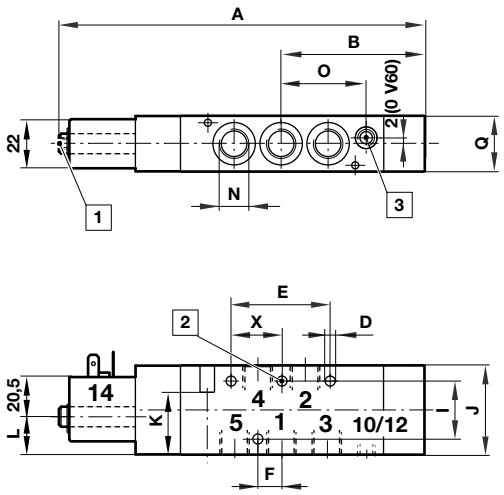

5/2 Sol/Air Spring V63

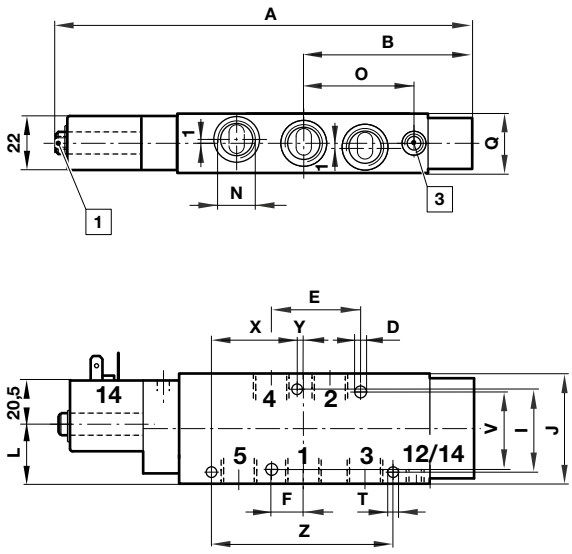

1 Collected pilot exhaust (M5)
2 V62: Central mounting hole (left hole is not applicable) and square end cover
3 External pilot port, M5 (V60 & V61), G1/8

Model	A	B	Ø D	E	F	I	J	K	L	N	O	Q	Ø T	V	X	Y	Z
V60	132	44,5	4,5	33,5	8	26	35	28	12	G1/8	–	22	–	–	17	–	–
V61	153	53	4,5	44	10	26	40	28	17	G1/4	–	25	–	–	22	–	–
V62	171,5	62,5	4,5	–	12	36	55	44	32	G3/8	–	34	–	–	26	–	–
V63	228	99	7	60	19	52	65	–	38	G1/2	–	35	5,5	46	57,5	3	115

IN-LINE VALVES

V60 … 63 3/2, 2x3/2, 5/2 & 5/3, G1/8 … G1/2

5/2 & 2x3/2 Sol/Sol V60-V62

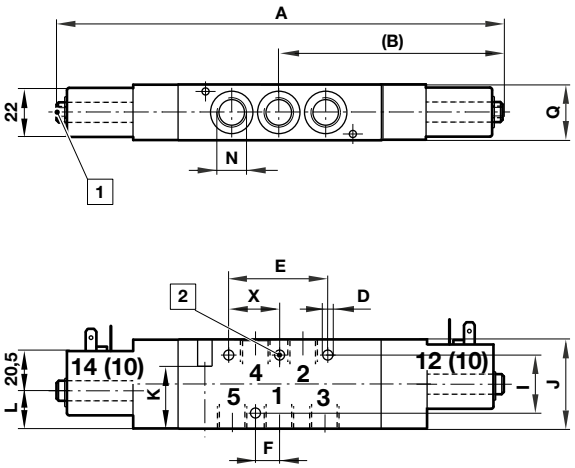

5/2 Sol/Sol V63

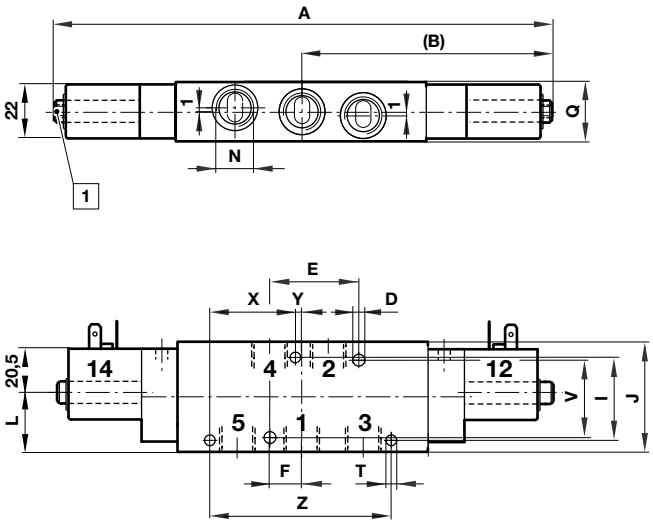

1 Collected pilot exhaust (M5)
2 V62: Central mounting hole (left hole is not applicable)

Model	A	B	Ø D	E	F	I	J	L	N	Q	Ø T	V	W	X	Y	Z
V60	174,5	87,5	4,5	33,5	8	26	35	12	G1/8	22	–	–	16	17	–	–
V61	199	99,5	4,5	44	10	26	40	17	G1/4	25	–	–	21	22	–	–
V62	218	109	4,5	–	12	36	55	32	G3/8	34	–	–	24,5	26	–	–
V63	257	128,5	7	60	19	52	65	38	G1/2	35	5,5	46	38	57,5	3	115

IN-LINE VALVES

V60 … 63 3/2, 2x3/2, 5/2 & 5/3, G1/8 … G1/2

5/3 Sol/Sol V60-V62

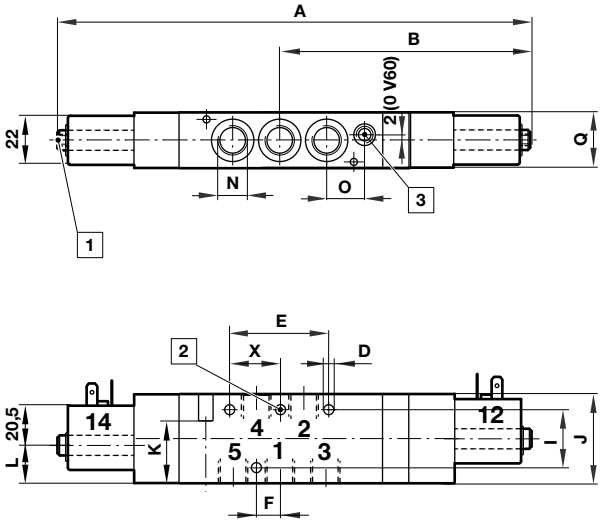

1 Collected pilot exhaust (M5)
2 V62: Central mounting hole (left hole is not applicable) and square end cover
3 External pilot port, M5 (V60 & V61), G1/8

Model	A	B	Ø D	E	F	I	J	L	N	O	Q	X
V60	188,5	101,5	4,5	33,5	8	26	35	12	G1/8	13	22	17
V61	217	117,5	4,5	44	10	26	40	17	G1/4	18	25	22
V62	240,5	131,5	4,5	–	12	36	55	32	G3/8	23,5	34	26

3/2NC Air/Spring V60-V61

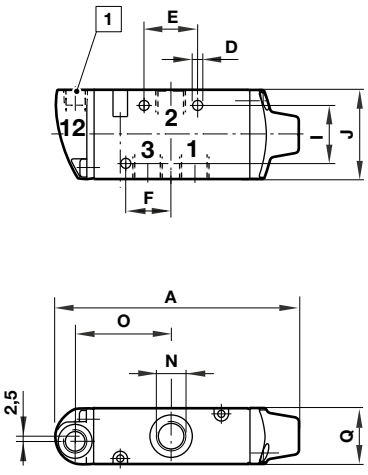

3/2NC Air/Spring V62

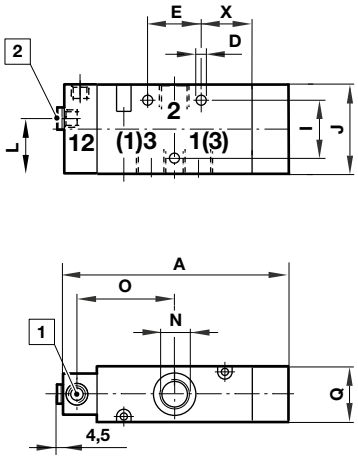

3/2NC Air/Spring V63

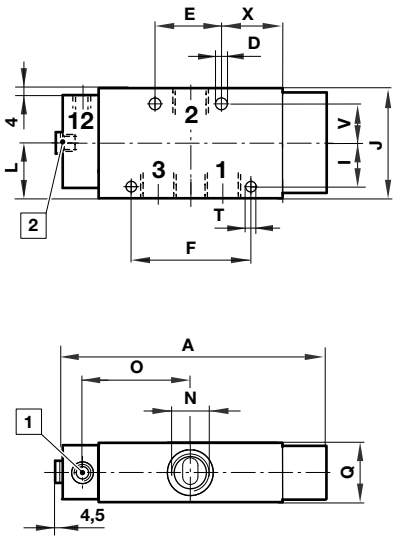

1 Pilot ports G1/8
2 Alternative pilot ports G1/8

Model	A	Ø D	E	F	I	J	L	N	O	Q	Ø T	V	X
V60	89,5	4,5	18	16	26	35	–	G1/8	36	22	–	–	–
V61	110	4,5	24	20	26	40	–	G1/4	43	25	–	–	–
V62	132	4,5	26	–	36	55	33,5	G3/8	52	34	–	–	–
V63	162	7	46	75	26	65	39,5	G1/2	64	35	5,5	23	36

IN-LINE VALVES

V60 … 63 3/2, 2x3/2, 5/2 & 5/3, G1/8 … G1/2

3/2NC Air/Air V60 & V61

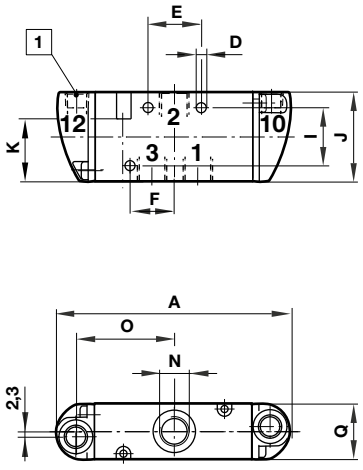

3/2NC Air/Air V62

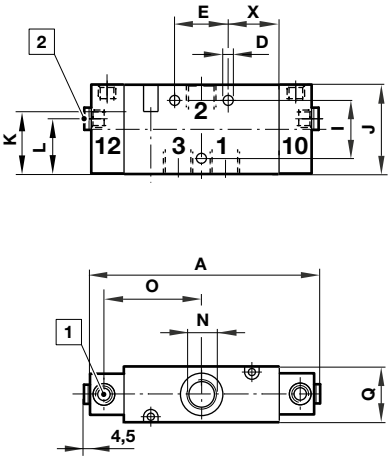

3/2NC Air/Air V63

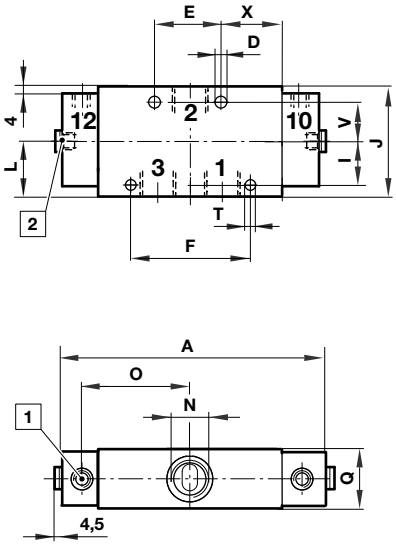

1 Pilot ports G1/8
2 Alternative pilot ports G1/8

Model	A	D	E	F	I	J	L	N	O	Q	T	V	X
V60	89	4,5	18	16	26	35	–	G1/8	36	22	–	–	–
V61	104	4,5	24	20	26	40	–	G1/4	43	25	–	–	–
V62	124	4,5	26	–	36	55	33,5	G3/8	52	34	–	–	30
V63	148	7	46	75	26	65	39,5	G1/2	64	35	5,5	23	36

IN-LINE VALVES

V60 … 63 3/2, 2x3/2, 5/2 & 5/3, G1/8 … G1/2

5/2 Air/Spring V60 & V61

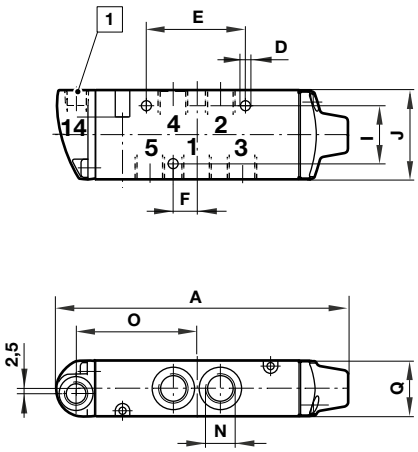

5/2 Air/Spring V62

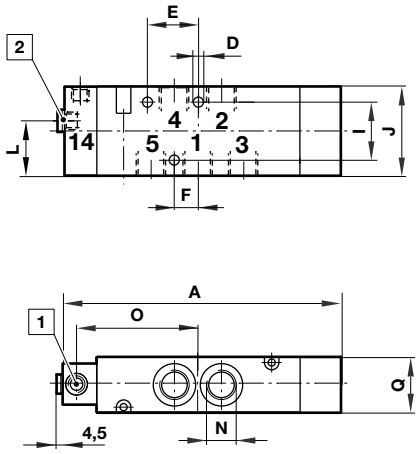

5/2 Air/Spring V63

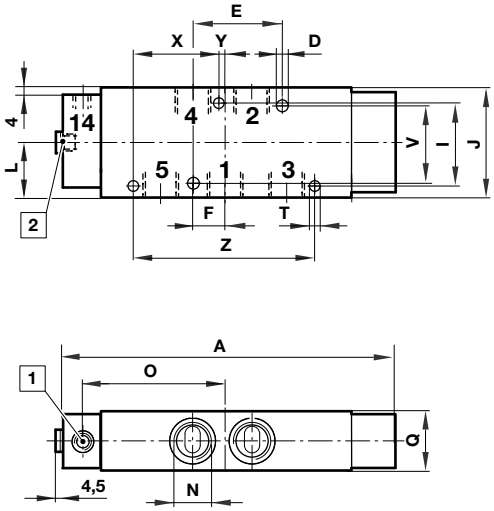

1 Pilot ports G1/8 or 1/8-27 NPT
2 Alternative pilot ports G1/8 or 1/8-27 NPT

Model	A	D	E	F	I	J	L	N	O	Q	T	V	X	Y	Z
V60	105	4,5	33,5	8	26	35	–	G1/8	43,5	22	–	–	–	–	–
V61	130	4,5	44	10	26	40	–	G1/4	53	25	–	–	–	–	–
V62	156	4,5	26	12	36	55	33,5	G3/8	64	34	–	–	–	–	–
V63	200	7	60	19	52	65	39,5	G1/2	83	35	5,5	46	57,5	3	115

IN-LINE VALVES

V60 … 63 3/2, 2x3/2, 5/2 & 5/3, G1/8 … G1/2

5/2 Air/Air V60 & V61

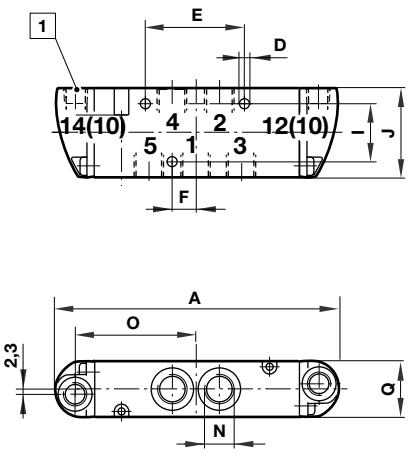

5/2 Air/Air V62

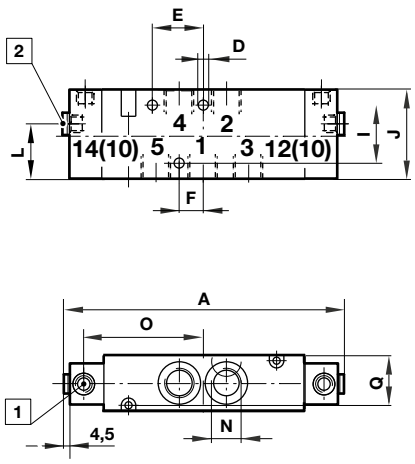

5/2 Air/Air V63

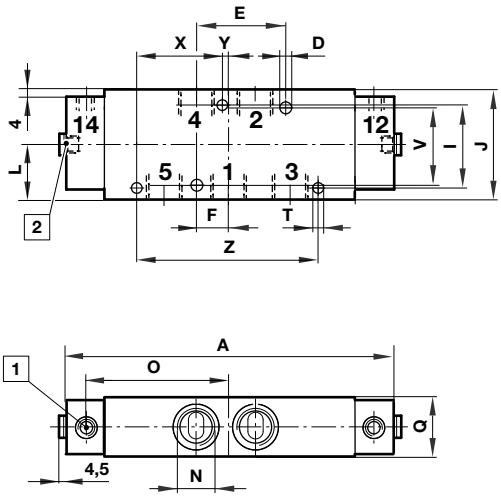

1 Pilot ports G1/8
2 Alternative pilot ports G1/8

Model	A	D	E	F	I	J	L	N	O	Q	T	V	X	Z
V60	104,5	4,5	33,5	8	26	35	–	G1/8	44	22	–	–	–	–
V61	124	4,5	44	10	26	40	–	G1/4	53	25	–	–	–	–
V62	148	4,5	26	12	36	55	33,5	G3/8	64	34	–	–	–	–
V63	186	7	60	19	52	65	39,5	G1/2	83	35	5,5	46	57,5	115

IN-LINE VALVES

V50 … V53 3/2, 5/2 or 5/3, G1/8 … G1/2

- Solenoid actuated and pilot operated spool valve
- High flow in-line valves
- Compact and robust design
- Low power energy efficient solenoids
- Flexible in-line and manifold mounting options

Technical Data

Medium:
Compressed air, filtered (40 µm) lubricated or non lubricated

Mounting position:
In-line or sub-base

Ambient temperature:
Pilot models: -5°C … +60°C
Solenoid models: -5°C … +50°C
Air supply must be dry enough to avoid ice formation at temperatures below +2°C

Models - Solenoid actuated

	G1/8	Operating Pressure (bar)	G1/4	Operating Pressure (bar)	G3/8	Operating Pressure (bar)	G1/2	Operating Pressure (bar)
Flow (l/min)								
3/2 & 5/2	480	–	1020	–	1705	–	2480	–
5/3	270	–	755	–	1190	–	1910	–
Models - 3/2 Valves								
Actuation								
Sol/Air Spring	V50A413A-A213A	2 … 8	–	–	–	–	–	–
Sol/Spring	–	–	V51B417A-A213J	2 … 8	V52C417A-A213J	2 … 8	V53D417A-A213J	2 … 8
Models - 5/2 Valves								
Actuation								
Sol/Air Spring	V50A513A-A213A	2 … 8	–	–	–	–	–	–
Sol / Spring	–	–	V51B517A-A213J	2 … 8	V52C517A-A213J	2 … 8	V53D517A-A213J	2 … 8
Sol/Sol	V50A511A-A213A	2 … 8	V51B511A-A213J	2 … 8	V52C511A-A213J	2 … 8	V53D511A-A213J	2 … 8
Models - 5/3 Valves								
Actuation								
Sol/Sol APB	V50A611A-A213A	3 … 8	V51B611A-A213J	3 … 8	V52C611A-A213J	3 … 8	V53D611A-A213J	3 … 8
Sol/Sol COE	V50A711A-A213A	3 … 8	V51B711A-A213J	3 … 8	V52C711A-A213J	3 … 8	V53D711A-A213J	3 … 8
Accessories								
Straight Fitting	C02250618	–	C02250828	–	C02251038	–	C02251248	–
Elbow Fitting	C02470618	–	C02470828	–	C02471038	–	C02471248	–
Silencer	T40C1800	–	T40C2800	–	T40C3800	–	T40C4800	–

Note: APB = All Ports Blocked, COE = Centre Open Exhaust, COP = Centre Open Pressure, NC = Normally closed.

Voltage codes and spare coils

V50 models only

15 mm coil for connector interface acc. EN 175 301-803, form C

Model	Voltage	Power Inrush/Hold	Code
			
V12958-A13	24 V d.c.	2,9 W	13A

V51 … V53 series

22 mm coil for connector interface acc. to industrial standard

Model	Voltage	Power Inrush/Hold	Code
			
QM/48/13J/21	24 V d.c	2 W	13J
QM/48/18J/21	110/120 V 50/60 Hz	4/2,5 VA	18J
QM/48/19J/21	220/240 V 50/60 Hz	6/5 VA	19J

Electrical details for solenoid operators

Voltage tolerance	± 10%
Rating	100% continuous duty
Inlet orifice	0,6 mm; V50
	0,8 mm; V51 … V53
Electrical connection (corresponding to choosen coil)	EN 175301-803 - Form C; 15 mm; V50
	Industrial Standard; 22 mm; V51 … V53
Solenoid coil mounting	Four positions x 90°
Manual override	Push and turn to lock (plastic)
Protection class	IP 65 (with sealed plug)

Connector plugs - included in delivery

15 mm, EN 175301-803 (DIN 43650 B) Form C 2-pole + PE	**Industrial standard 22 mm 2-pole + PE**
	
V10027-D00	0657868000000000

Dimensions

1

3/2 Single solenoid pilot valve, 1/8” port
Air return

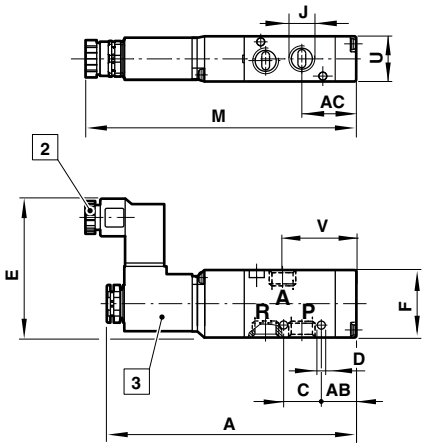

2

3/2 Single solenoid pilot valve, 1/4”… 1/2” ports
Spring return

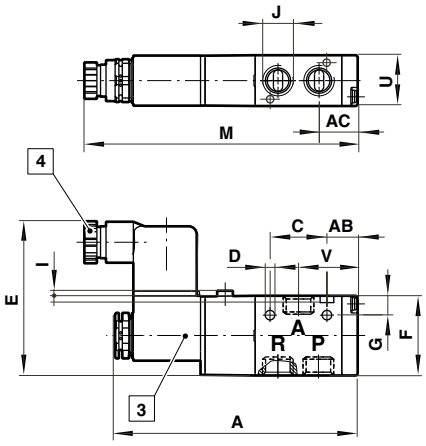

2 Gland size Pg 7
3 Solenoid rotates 2 x 180° (V50), 4 x 90° (V51 … V53)
4 Gland size Pg 9

Series	Dimension No.	A	AB	AC	C	D	E	F	G	I	J	M	U	V
V50	1	99,5	13,5	21,5	15	3,2	55,5	27	5	–	1/8”	108	18	29,5
V51	2	106,5	13,5	17	25	4,2	67	35	8,5	3	1/4”	120	22,5	26
V52	2	126,5	13	26	26	4,5	73	46,5	39,5	3	3/8”	139,5	30	41
V53	2	133	12,5	27	29	4,5	73	46,5	39,5	3	1/2”	146	30	40,5

3

5/2 Single solenoid pilot valve, 1/8” port
Air return

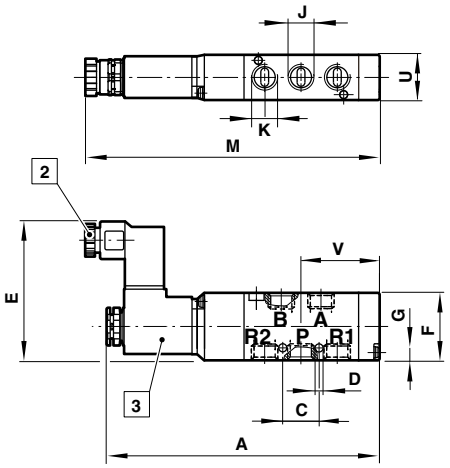

4

5/2 Single solenoid pilot valve, 1/4”… 1/2” ports
Spring return

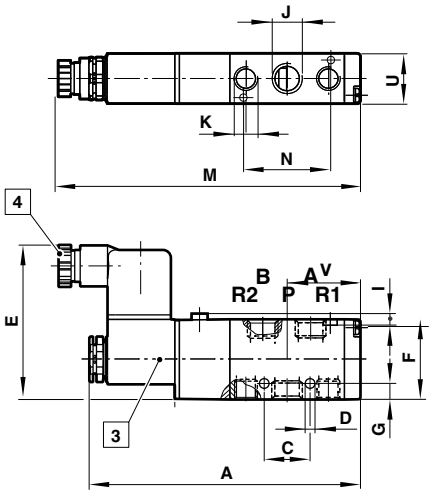

2 Gland size Pg 7
3 Solenoid rotates 2 x 180° (V50), 4 x 90° (V51 … V53)
4 Gland size Pg 9

Series	Dimension No.	A	C	D	E	F	G	I	J	K	M	U	V
V50	3	110	14,5	3,2	54	27	5	–	1/8”	1/8”	118,5	18	32,5
V51	4	118,5	20	4,2	67	35	7	3	1/4”	1/8”	132	22,5	32
V52	4	145,5	26	5,5	73	46,5	4,5	3	3/8”	3/8”	158,5	30	45
V53	4	157	29	4,5	73	46,5	7	3	1/2”	1/2”	170	30	51

IN-LINE VALVES

V50 … V53 3/2, 5/2 or 5/3, G1/8 … G1/2

5

5/2 Double solenoid pilot valve, 1/8” port

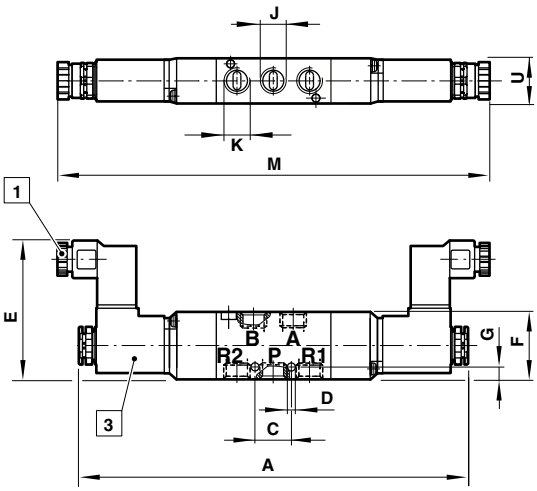

6

5/2 Double solenoid pilot valve, 1/4”… 1/2” ports

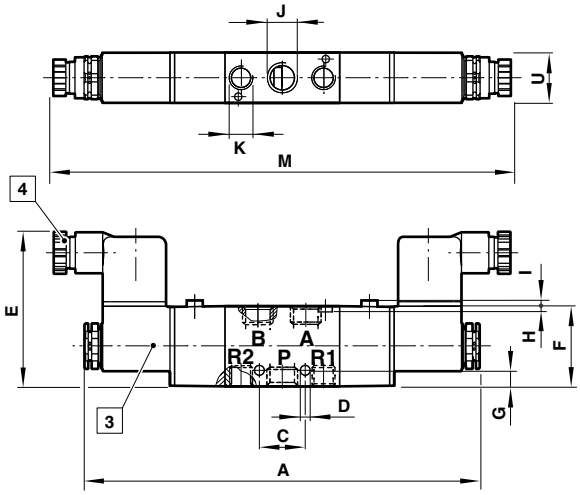

2 Gland size Pg 7
3 Solenoid rotates 2 x 180° (V50), 4 x 90° (V51 … V53)
4 Gland size Pg 9

Series	Dimension No.	A	C	D	E	F	G	I	J	K	M	U
V50	5	155	14,5	3,2	55	27	5	–	1/8”	1/8”	172	18
V51	6	173	20	4,2	67	35	7	3	1/4”	1/8”	200	22,5
V52	6	201	26	5,5	73	46,5	4,5	3	3/8”	3/8”	228	30
V53	6	212	29	4,5	73	46,5	7	3	1/2”	1/2”	238	30

PRODUCT LINKS

V50...53 Valves

Are supplied with basic wireable connectors as standard.

For a further selection of cables and connectors please see page 132

7

5/3 Double solenoid pilot valve, 1/8” port

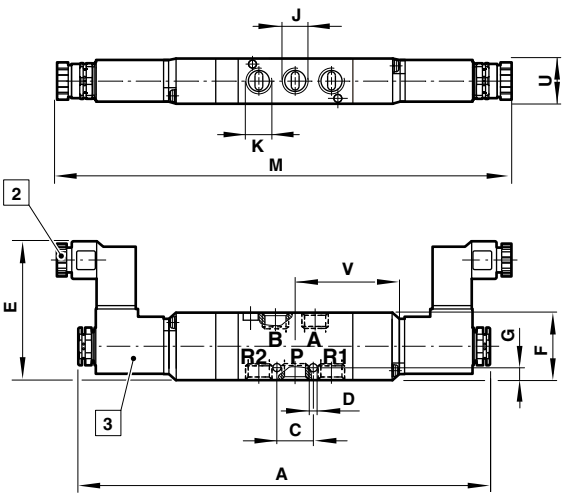

8

5/3 Double solenoid pilot valve, 1/4” port

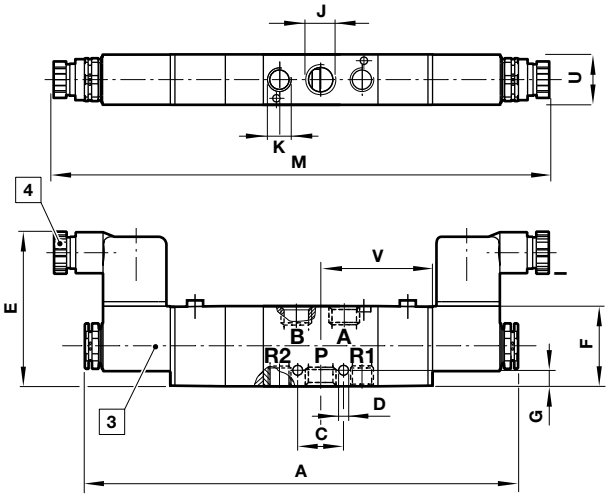

9

5/3 Double solenoid pilot valve, 3/8”and 1/2” ports

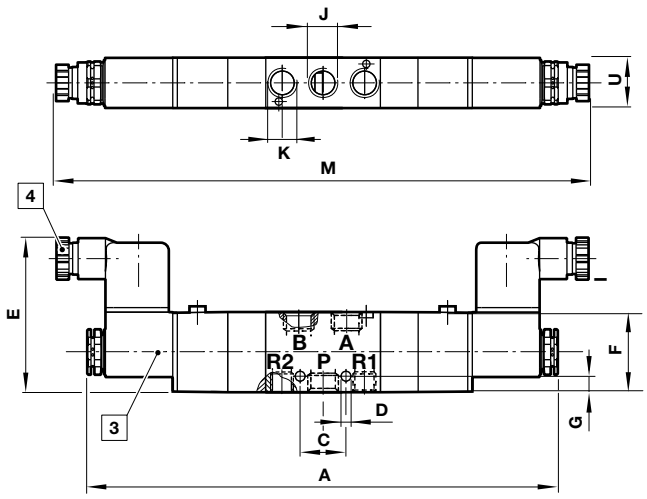

2 Gland size Pg 7
3 Solenoid rotates 2 x 180° (V50), 4 x 90° (V51 … V53)
4 Gland size Pg 9

Series	Dimension No.	A	C	D	E	F	G	I	J	K	M	U	V
V50	7	164	14,5	3,2	55	27	5	–	1/8”	1/8”	181	18	43,5
V51	8	194	20	4,2	67	35	7	3	1/4”	1/8”	221	22,5	48,5
V52	9	254,5	26	5,5	73	46,5	4,5	3	3/8”	3/8”	281,5	30	–
V53	9	265,5	29	4,5	73	46,5	7	3	1/2”	1/2”	291,5	30	–

SOLENOID ACTUATED 22 MM POPPET VALVES

Excel 22, M/49 3/2, NC, G1/8

- In-line and sub-base mounted – compact and convenient
- Manual override as standard

Technical Data

Medium:
Compressed air, filtered, lubricated or non-lubricated

Operating pressure:
0 … 10 bar

Ambient temperature:
-20°C … +50°C
Air supply must be dry enough to avoid ice formation at temperatures below +2°C

Models

Accessories

Model	Actuation	Orifice	Port size	Flow (l/min)	Operating pressure (bar)	Mounting	Straight fitting	Elbow fitting	Basic plug
									
M/49/MAZ***	3/2 NC	1 mm (low power)	G1/8	30	0 … 10	Single	C02250618	C02470618	M/P19063
M/49/MDZ***	3/2 NC	1,6 mm	G1/8	77	0 … 10	Single	C02250618	C02470618	M/P19063

*** Insert voltage codes from table below.
Order connector plugs separately.

Voltage codes and spare coils

Voltage	1,0 mm orifice (low power)		
	Code	Power	Coil
24 V d.c.	13J	2 W	QM/48/13J/21
110/120 V 50/60 Hz	18J	4/2,5 VA	QM/48/18J/21
220/240 V 50/60 Hz	19J	6/5 VA	QM/48/19J/21

Voltage	1,6 mm orifice		
	Code	Power	Coil
24 V d.c.	83J	6 W	QM/48/83J/21
110/120 V 50/60 Hz	88J	12/8 VA	QM/48/88J/21
220/240 V 50/60 Hz	89J	12/8 VA	QM/48/89J/21

Dimensions

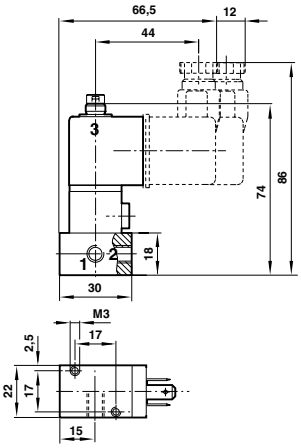

PRODUCT LINKS

Connectors and cables

For a full selection of 22 mm Industrial Standard or DIN EN175301-803 Form B plugs and cables

See page 132

TWO-HAND CONTROL UNIT

XSHC04 PIF 4 mm

- Meets the requirements of EN574 Class IIIB *1)
- Certificate of Conformity supplied with every unit
- Both hands must be engaged simultaneously
- Single fault tolerant
- Protection against accidental operation
- No setting or adjustment required

Technical Data

Medium:
Compressed air filtered to 40 µm, lubricated or non-lubricated operation

Operating pressure:
3 … 8 bar

Ambient temperature:
-5°C … +40°C
Air supply must be dry enough to avoid ice formation at temperatures below +2°C

*1) The scope of the Machinery Directive encompasses safety components as well as machinery, and since two-hand control units are classed as safety components this requires the XSHC04 to satisfy the essential health and safety requirements of the Directive. One method of ensuring this is to conform with published European Norm (EN) Standards. In the case of the XSHC04 the main standard is EN574 Safety of Machinery – Two Hand Control Devices, Functional Aspects – Principles for Design. This standard classifies two- hand controls into various types, each requiring minimum performance and safety characteristics, such as simultaneous operation, fault tolerance, prevention of accidental operation etc.

Models

Model	O/D tube	Return	Operation
XSHC04	4 mm	0,6 s max.	Both buttons must be operated within 0,5 secs

Dimensions

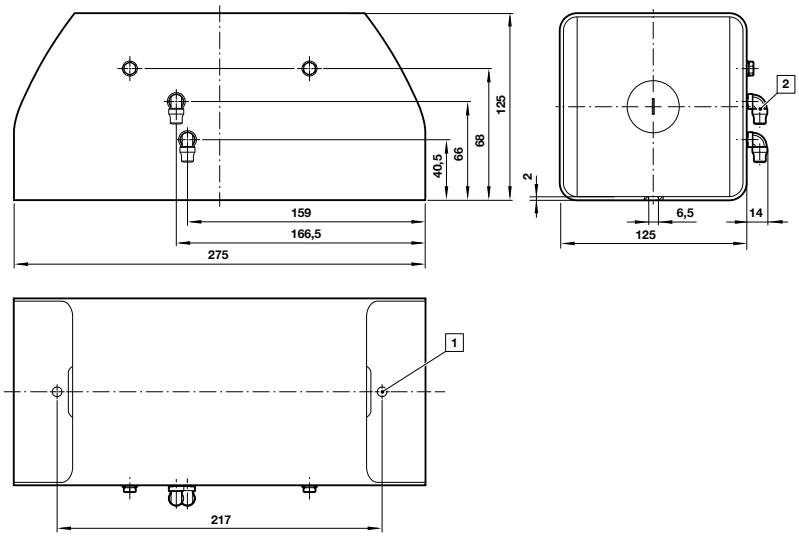

1 Mounting hole
2 Pneufit fitting turnable

SOLENOID ACTUATED SAFETY VALVES

SCVA08, SCVA20 & SCVA32 3/2 – G1/4, G3/4, G1

- Redundant valve assembly, pneumatic self-monitoring with integrated safety silencer
- Ensures safe loading and venting
- Requires no cyclical monitoring or evaluation system
- A complete range in sizes - DN 8, 20 and 32
- With the appropriate application, performance level “e” (cat. 4) of DIN EN ISO 13849-1 is achieved for the safety function “Pressure building up from ‘1’ to ‘2’ and pressure dropping from ‘2’ to ‘3’ “- DGUV approval

Technical Data

Medium:
Compressed air, filtered ≤ 50 µm, lubricated or non-lubricated

Operating Pressure:
See table below

Mounting:
Preferably upright with solenoids on top

Press control:
Valves are not approved for press clutch and brake applications

Ambient temperature:
-10°C … +60°C
Air supply must be dry enough to avoid ice formation at temperatures below +2°C

Models

Accessories

Model	Port size	Orifice (mm)	Power at 24 V d.c. (W)	Pressure range (bar)	Flow 1 » 2 (l/min)	Flow 2 » 3 (l/min)	Port sizes 1	Port sizes 2	Port sizes 3	Plug	Pressure switch - flange/face mounted direct onto valve *2)
											
SCVA081BB0A02400	G1/4	8	4,8	3 … 10	1280	1550	G 1/4	G 1/4	G 1/4	0680003000000000, EN 175301-803 - form B	0881400000000000
SCVA201EF0B02400	G3/4	20	11	2 … 10	3900	14000	G 3/4	G 3/4	G 1	0570275000000000, EN 175301-803 - form A	0881400000000000
SCVA321FH0C02400	G1	32	16	2 … 10	8250	30000	G 1	–	–	0570275000000000, EN 175301-803 - form A	0881400000000000

*2) The pressure switch is not required as part of the safe functioning system within the valve, its is offered as a means of indicating that the valve taken up a safe condition ie. no pressure at the output port 2.

Technical data – Solenoids

Standard voltages	24 V d.c.
Duty cycle	100% ED
Protection class	IP65

Other voltages on request!

Functional diagram

Basic position
Channel “2” onto “3”
Safety silencer relieved

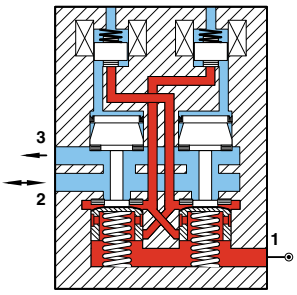

Working position
Both solenoids energized
Channel „1“ onto „2“ turned on

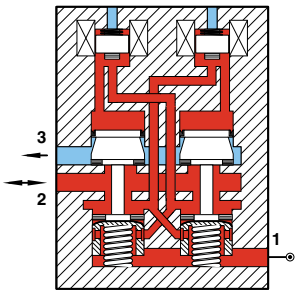

Safety position
For unbalanced control, faulty solenoid, dirty valve, etc.

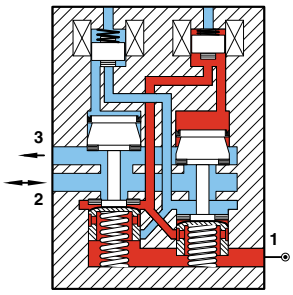

Time to vent residual pressure to 0,5 bar

Model	Volume (dm³)	Operating pressure (bar)	Exhaust time (ms)
SCVA081…	1	5	200
		8	250
		10	290
	3	5	560
		8	730
		10	820

Model	Volume (dm³)	Operating pressure (bar)	Exhaust time (ms)
SCVA201…	8	5	230
		8	290
		10	330
	20	5	520
		8	700
		10	800

Model	Volume (dm³)	Operating pressure (bar)	Exhaust time (ms)
SCVA321…	20	5	310
		8	400
		10	420
	50	5	730
		8	930
		10	1100

Dimensions

SCVA081BB0A02400 (G1/4)

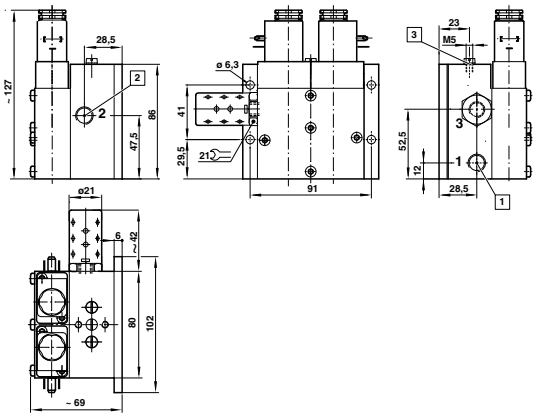

1 Port 1 (G1/4)
2 Port 2 (G1/4)
3 Interface for pressure switch

SCVA321FH0C02400 (G1)

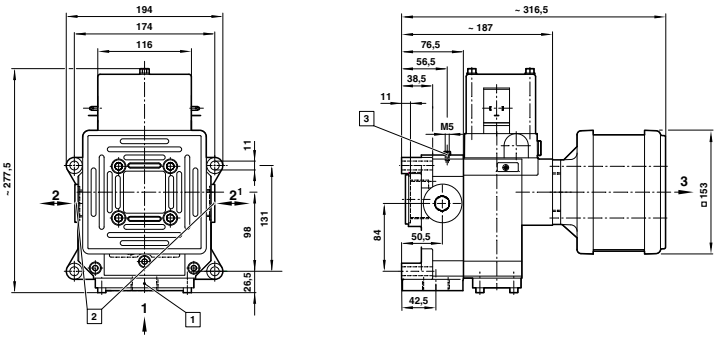

1 Port 1 (G1)
2 Alternative ports (G1), two plugs are in scope of delivery
3 Interface for pressure switch

SCVA201EF0B02400 (G3/4)

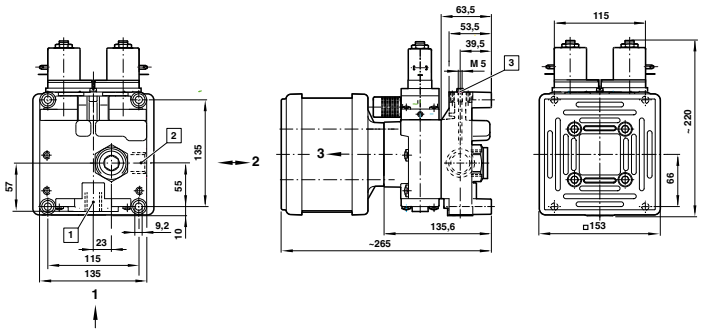

1 Port 1 (G3/4)
2 Port 2 (G3/4)
3 Interface for pressure switch

SOLENOID ACTUATED SAFETY VALVES

SCVA10 3/2 – G1/2

- Redundant valve assembly, pneumatic selfmonitoring with integrated safety silencer
- Ensures safe loading and venting
- Requires no cyclical monitoring or evaluation system
- With the appropriate application, performance level "e" (cat. 4) of DIN EN ISO 13849-1 is achieved for the safety function "Pressure building up from '1' to '2' and pressure dropping from '2' to '3' "- DGUV approval
- Valve interface enables direct mount to the Excelon 73/74 series air preparation products

Technical Data

Medium:
Compressed air, filtered ≤ 50 µm, lubricated or non-lubricated

Operating pressure:
See table below

Mounting:
Preferably upright with solenoids

Press control:
Valves are not approved for press clutch and brake applications

Ambient temperature:
-10°C … +60°C
Air supply must be dry enough to avoid ice formation at temperatures below +2°C

Models

Accessories

Model	Orifice (mm)	Power at 24 V d.c. (W)	Pressure range (bar)	Flow 1 » 2 (l/min)	Flow 2 » 3 (l/min)	Port sizes 1	Port sizes 2	Port sizes 3	Connector form A, DIN EN 175301-803	Quikclamp® with wall bracket *1)	Quikmount pipe adaptor	Pressure switch - flange/face mounted direct onto valve *2)
												
SCVA101DE1A02400	10	4,8	2 … 10	3400	6500	G 1/2	G 1/2	G 3/4	06800030000000000	4314-52	4315-11 (G1/2)	08814000000000000

*1) Quikmount pipe adaptor please order separately.
*2) The pressure switch is not required as part of the safe functioning system within the valve, its is offered as a means of indicating that the valve taken up a safe condition ie. no pressure at the output port 2.

Technical data – Solenoids

Standard voltages	24 V d.c.
Duty cycle	100% ED
Protection class	IP65

Other voltages on request!

Functional diagram

Basic position
Channel "2" onto "3"
Safety silencer relieved

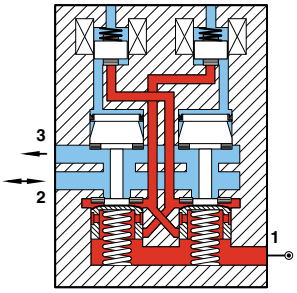

Working position
Both solenoids energized
Channel „1" onto „2" turned on

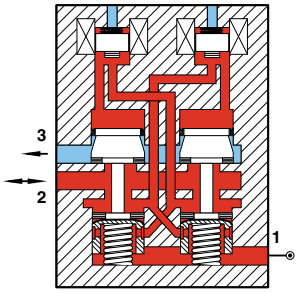

Safety position
For unbalanced control, faulty solenoid, dirty valve, etc.

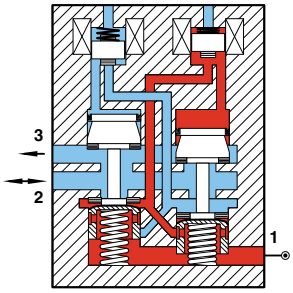

Time to vent residual pressure to 0,5 bar

Model	Volume (dm³)	Operating pressure (bar)	Exhaust time (ms)
SCVA101…	3	5	200
		8	250
		10	280
	8	5	450
		8	580
		10	640

Dimensions

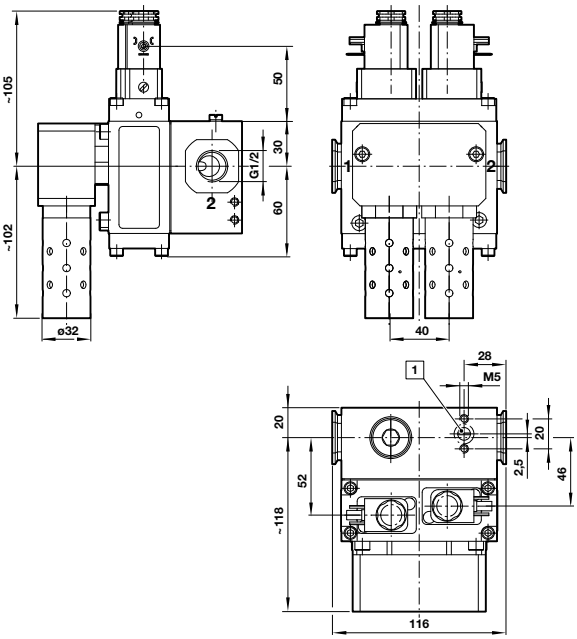

SAFETY VALVES WITH INTEGRATED SOFT START FUNCTION

SCSQ 3/2, G1/2

- Redundant valve assembly, pneumatic self-monitoring with integrated safety silencer
- Requires no cyclical monitoring or evaluation system
- With the appropriate application, performance level "e" (cat. 4) of DIN EN ISO 13849-1 is achieved for the safety function "Pressure building up from '1' to '2' and pressure dropping from '2' to '3' "- DGUV approval
- Valve interface enables direct mount to the Excelon 73/74 series air preparation products

Technical Data

Medium:
Compressed air, filtered ≤ 50 µm, lubricated or non-lubricated

Operating pressure:
See table below

Mounting:
Preferably upright with solenoids on top

Press control:
Valves are not approved for press clutch and brake applications

Ambient temperature:
-10°C … +60°C
Air supply must be dry enough to avoid ice formation at temperatures below +2°C

Models

Accessories

Model	Orifice (mm)	Power at 24 V d.c. (W)	Pressure range (bar)	Flow 1 » 2 (l/min)	Flow 2 » 3 (l/min)	Port sizes 1	Port sizes 2	Port sizes 3	Connector form A, DIN EN 175301-803	Quikclamp® with wall bracket *1)	Quikmount pipe adaptor	Pressure switch - flange/face mounted direct onto valve *2)
												
SCSQ101D01D02400	10	4,5	3,5 … 10	3000	5700	G 1/2	G 1/2	G 3/4	05702750000000000	4314-52	4315-11 (G1/2)	08814000000000000

*1) Quikmount pipe adaptor please order separately.
*2) The pressure switch is not required as part of the safe functioning system within the valve, its is offered as a means of indicating that the valve taken up a safe condition ie. no pressure at the output port 2.

Technical data – Solenoids

Standard voltages	24 V d.c.
Duty cycle	100% ED
Protection class	IP65

Other voltages on request!

Functional diagram

Basic position
Channel "2" onto "3"
Safety silencer relieved

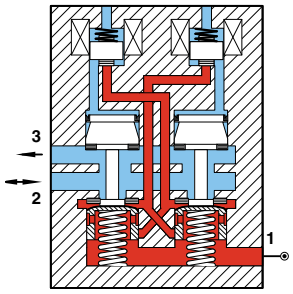

Working position
Both solenoids energized
Channel „1" onto „2" turned on

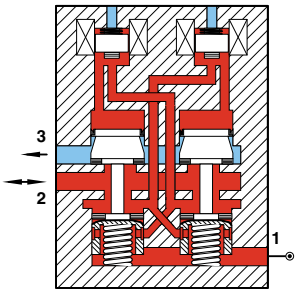

Safety position
For unbalanced control, faulty solenoid, dirty valve, etc.

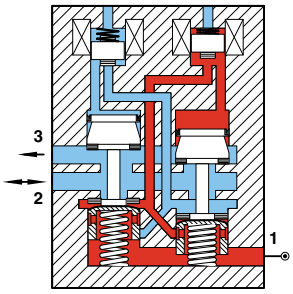

Soft start function
The safety valve with soft start function provides for a controlled build-up of pressure at the valve output in two stages:
Stage 1 – The pressure builds up slowly depending on the setting of the throttle valve and the volume of the system to be filled.
Stage 2 – At a certain pressure level (ps) an internal pilot valve operates bypassing the throttle allowing full operating pressure at the valve outlet. This pressure level (ps) will be dependant on the operating pressure (po) of the system and can be estimated to be greater than 60% of the operating pressure (ps > = 0,6 x po)

Filling time depending on throttle position of soft start valve

From switching signal ON to pressure build-up 90% of rated pressure

Operating pressure (bar)	Volume (dm^3)	Filling time approx. (ms) Numbers of needle turn		
		4	6	12
5	3	3200	2600	1700
	8	8300	7000	4300
6	3	3000	2400	1500
	8	7800	6500	3900
8	3	2700	2200	1400
	8	7300	5700	3700

Exhausting time

From switching signal OFF to pressure reduction to 10% of rated pressure

Operating pressure (bar)	Volume (dm^3)	Exhaust time (ms)
5	3	190
	8	440
6	3	200
	8	460
8	3	210
	8	480

Dimensions

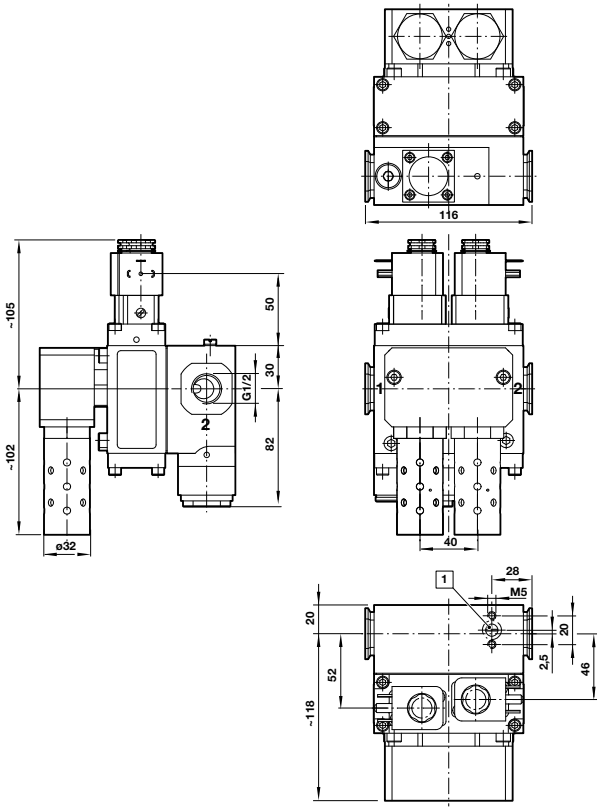

1 Interface for pressure switch

SOLENOID ACTUATED PRESS SAFETY VALVES

XSz 8 … XSz 50 3/2, G 1/4 … G2

- Inherently fail-safe without residual pressure
- Dynamic self monitoring
- For use with pneumatic clutch and brake systems and other 3-way safety functions
- Conforms to DIN ISO13849-1 (perf level 'e', cat IV) OSHA, BG, CSA and other approvals
- Improves safety and reduces downtime
- No additional electrical monitoring required
- Easily fitted into existing systems

Technical Data

Medium:
Compressed air, filtered (≤50 µm), lubricated and non-lubricated

Suitable oils:
Shell Tellus S2 MA 32, ExxonMobil Febis K 32 or comparable oil with DVI values <8 (DIN ISO 1817) and ISO viscosity class 32-46 (DIN 51519)

Operating Pressure:
2 … 10 bar
For more details please see table

Mounting position:
Preferably upright with solenoids on top

Ambient temperature:
-10°C … +60°C
Air supply must be dry enough to avoid ice formation at temperatures below +2°C

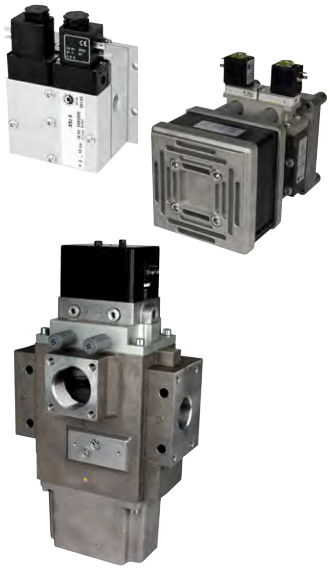

Models

Model *	Series	Pressure range (bar)	Flow 1 (P) »2 (A) 2 (A) » 3 (R)		Port sizes				Dimension No.
			(m³/h)	(m³/h)	1 (P)	2 (A)	2_1 (A_1)	3 (R)	
2492806305202400	XSz 8 *1)	3 … 10	77	93	G1/4	G1/4	–	G1/4	1
2492932305202400	XSz 10 *2)	2 … 10	190	390	G1/2	G1/2	(G1/2)	–	2
2493032020002400	XSz 20 *2)	2 … 8	230	840	G3/4	G3/4	G1	–	3
2493105080002400	XSz 32 *2)	2 … 8	495	1800	G1	G1	G1 1/2	–	4

Port sizes in brackets are plugged.
* 24vDC Solenoids included. For other voltages please contact us. All solenoids are delivered without plugs.
*1) XSz 8 valves are delivered with silencer.
*2) Valves delivered with integrated silencer and without flange (R ports).

Technical data – Solenoids

Model	0200, 0800, and 3052
Standard voltages	24 V d.c. and 230 V a.c., other on request
Duty cycle	100% ED
Protection class	IP65
Electrical connection	DIN EN 175301-803 (DIN 43650), form A

Model	Power consumption V d.c. (W)	Current V a.c.	
		Inrush (VA)	Hold (VA)
0200	11	22	15
0800	16	50	27
3052	4,8	12	8,5

Accessories

Series	Connector DIN EN 175301-803	Silencer
		
XSz 8	0680003000000000	MB002B (G 1/4), MB003B (G 3/8)
XSz 10	0680003000000000	–
XSz 20	0570275000000000	–
XSz32	0570275000000000	–

Caution: the safety is related to the quality of the silencer, use only IMI Norgren original silencers.

Functional diagram

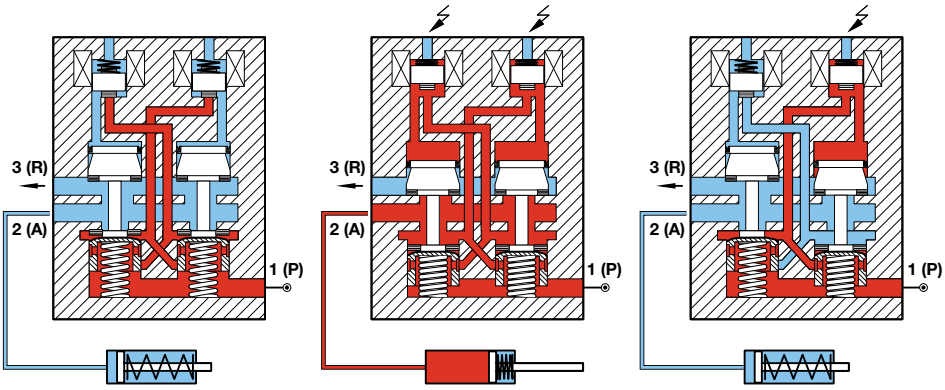

Solenoids de-energized
A port is exhausted. P port is closed, no connection from P to A. No residual pressure on port A as port A is freely exhausted through port R. No acting pressure on port A.

Solenoids energized
Pilots are synchronously energised. Connection from port P to A. Working pressure on A. No passage from P to R. Dynamic self monitoring of both pilot systems, checking each other at each cycle for proper functioning.

Malfunction
Pilots non-synchronously energised. Dynamic monitor notices failure operation and prevents the pistons from giving connection from P to A. Synchronously port A exhausts through R. No residual pressure remains in the system since P and A are not connected. The pilot line has lost the pressure and is locked.

1 (P) = Air pressure port, 2 (A) = Power port (clutch / brake), 3 (R) = Exhaust.
IMI Norgren XSz Safety valves comply with the Category IV of DIN EN ISO 13849-1, if the operating system has been designed and realised according to Category IV.

Dimensions

1 - XSz 8 - with silencer

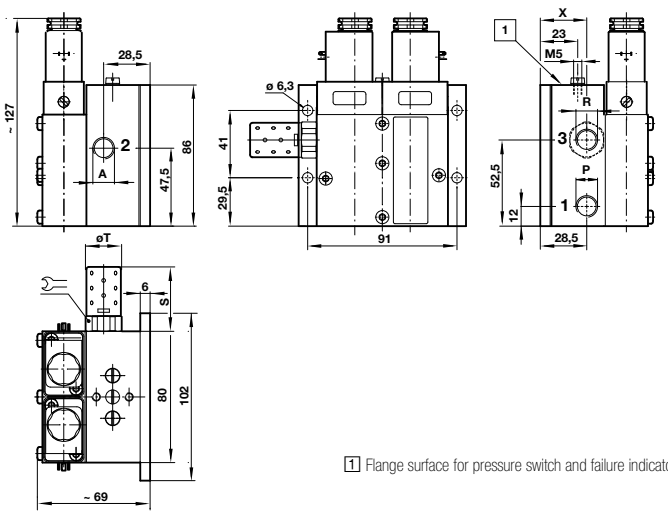

Model	1 (P)	2 (A)	3 (R)	S	øT	X	
24928063052	G 1/4	G 1/4	G 1/4	42	21	–	21

1 Flange surface for pressure switch and failure indicator unit

SOLENOID ACTUATED PRESS SAFETY VALVES

XSz 8 … XSz 50 3/2, G 1/4 … G2

2 - XSz 10 - with silencer

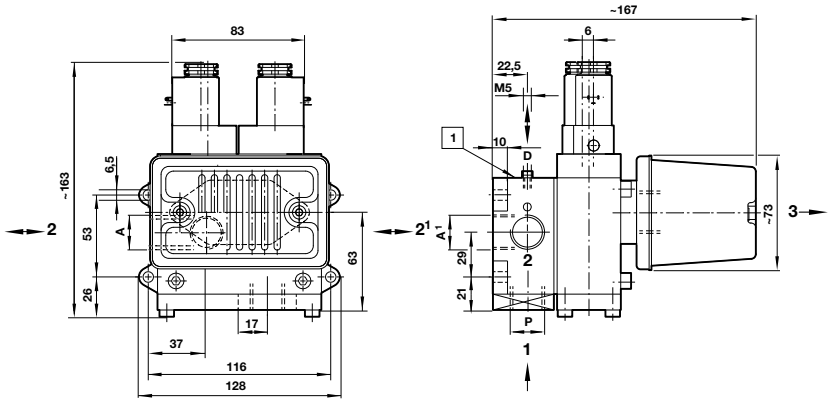

Model	1 (P)	2 (A)	2¹ (A¹)	3 (R)
24929323052	G 1/2	G 1/2	G 1/2 *	–

* Closed

1 Flange surface for pressure switch and failure indicator unit

3 - XSz 20 - with silencer

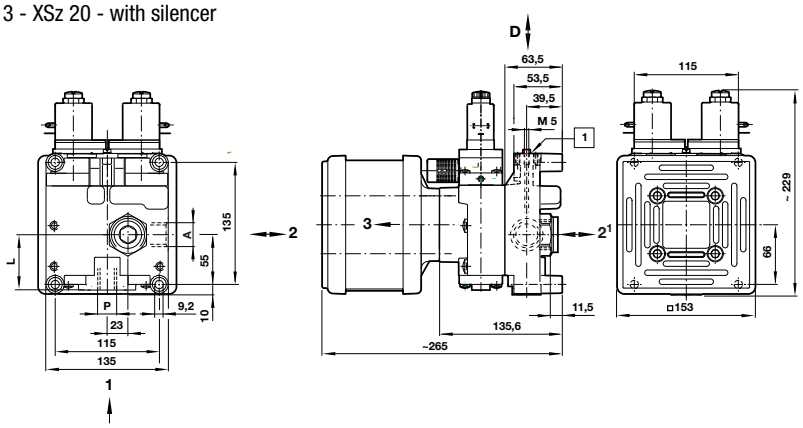

Model	1 (P)	2 (A)	2¹ (A¹)	3 (R)	L
24930320200	G 3/4	G 3/4	G 1	–	66,5 (57)

1 Flange surface for pressure switch and failure indicator unit

4 - XSz 32 - with silencer

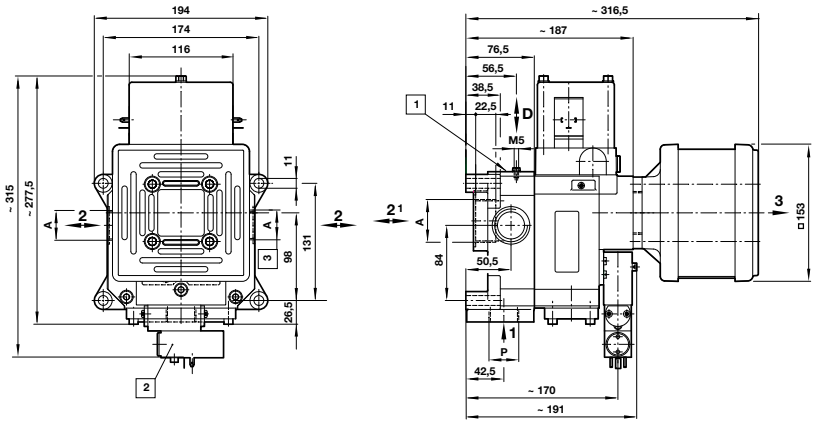

Model	1 (P)	2 (A)	2¹ (A¹)	3 (R)
24931050800	G1	G1	G1 1/2	–

1 Flange surface for pressure switch and failure indicator unit

Super X series
Manual and mechanical valve

Strong, robust and reliable, they employ a mixture of custom-made and electrical style operating heads on a modular body system covering 3/2, 5/2 and 5/3 functions. New er options now include many 3/2 versions with a moulded body having either threaded ports or integral push-in fittings.

For heavier applications, traditional die-cast bodies are still available. In addition to the standard catalogued series, IMI Precision Engineering also produces many special options covering more diverse applications.

- Compact, high flow for body size with electrical style operators – complete integration with other control systems and aesthetically pleasing
- Wide range of operators in all functions, able to meet most control requirements – best use of standard product with total flexibility and minimum spares holding and inventory count
- Moulded body available with integral PIFs

Engineering GREAT Solutions

Find out more
www.imi-precision.com

IMI NORGREN

MANUALLY & MECHANICALLY ACTUATED SPOOL VALVE

Super X 3/2, 5/2 and 5/3, G1/8, G1/4

- Suitable for multi-directional flow and dual supply applications
- High flow rate
- Electrical style manual operators offer ease of use, and include several special use versions which can be used to comply with health and safety requirements

Technical Data

Medium:
Compressed air, filtered, lubricated and non-lubricated

Operating pressure:
Maximum 10 bar

Flow:
1/8" 335 l/min
1/4" 965 l/min

Ambient temperature:
0°C … +70°C
Air supply must be dry enough to avoid ice formation at temperatures below +2°C

3/2 way PA body valves
Metal versions are available on request

Port assembly torque:
Use recommended torque for fittings. This should not exceed 10 Nm, otherwise damage may occur to body.

Please contact us - many options available ex-stock

Models – 3/2 mechanical valves

Accessories

	Model	Port size	Actuation	Operating pressure (bar)	Operating force (N)	Dimension No.	Straight fitting	Elbow fitting	Silencer
									
	03040002	G1/8	Plunger/spring	- 0,9 … 10	31	1	C02250618	C02470618	T40C1800
	03060002	G1/4	Plunger/spring	- 0,9 … 10	53	8	C02250828	C02470828	T40C2800
	03040202	G1/8	Roller/spring	- 0,9 … 10	31	2	C02250618	C02470618	T40C1800
	03060202	G1/4	Roller/spring	- 0,9 … 10	61	9	C02250828	C02470828	T40C2800
	03041102	G1/8	Roller lever/spring	- 0,9 … 10	31	3	C02250618	C02470618	T40C1800
	03061102	G1/4	Roller lever/spring	- 0,9 … 10	45	10	C02250828	C02470828	T40C2800
	03029302	G1/8	Roller lever (heavy duty) /spring	- 0,9 … 10	31	4	C02250618	C02470618	T40C1800

Models – 3/2 manual valves

Accessories

	Model	Port size	Actuation	Colour	Operating pressure (bar)	Operating force (N)	Dimension No.	Straight fitting	Elbow fitting	Silencer
										
	03040402	G1/8	Button/spring	Black	- 0,9 … 10	31	13	C02250618	C02470618	T40C1800
	03040602	G1/8	Button/spring	Red	- 0,9 … 10	31	13			
	03041402	G1/8	Button (shrouded)/spring	Black	- 0,9 … 10	31	14	C02250618	C02470618	T40C1800
	03041502	G1/8	Button (shrouded)/spring	Green	- 0,9 … 10	31	14	C02250618	C02470618	T40C1800
	03041602	G1/8	Button (shrouded)/spring	Red	- 0,9 … 10	31	14	C02250618	C02470618	T40C1800
	03042802	G1/8	Emergency stop/twist reset	Red	- 0,9 … 10	18	15	C02250618	C02470618	T40C1800
	03041902	G1/8	Rotary knob/set reset	Black	- 0,9 … 10	–	20	C02250618	C02470618	T40C1800
	03029602	G1/8	Lever toggle/spring	Black	- 0,9 … 10	13	16	C02250618	C02470618	T40C1800
	03040302	G1/8	Toggle/toggle	Black	- 0,9 … 10	28	17	C02250618	C02470618	T40C1800
	03042402	G1/8	Knob/knob or pilot	Black	- 0,9 … 10	18	19	C02250618	C02470618	T40C1800
	03062702	G1/4	Knob/knob or pilot	Black	- 0,9 … 10 *	13	32	C02250828	C02470828	T40C2800
	03043702	G1/8	Lever/lever	Black	- 0,9 … 10	9	18	C02250618	C02470618	T40C1800
	03063702	G1/4	Lever/lever	Black	- 0,9 … 10	13	33	C02250828	C02470828	T40C2800
	03043802	G1/8	Lever/spring	Black	- 0,9 … 10	9	18	C02250618	C02470618	T40C1800
	03048102	G1/8	Pedal/spring	–	- 0,9 … 10	22	21	C02250618	C02470618	T40C1800
	03068102	G1/4	Pedal/spring	–	- 0,9 … 10	22	31	C02250828	C02470828	T40C2800

* Reset pressure: 4 bar minimum.
Pressure for pilot function is the minimum pressure to operate the valve. The valve may switch below this pressure.

MANUALLY & MECHANICALLY ACTUATED SPOOL VALVE

Super X 3/2, 5/2 and 5/3, G1/8, G1/4

Models – 5/2 mechanical valves

Accessories

	Model	Port size	Actuation	Colour	Operating pressure (bar)	Operating force (N)	Dimension No.	Straight fitting	Elbow fitting	Silencer
										
	X3044202	G1/8	Roller/spring	–	- 0,9 … 10	54	5	C02250618	C02470618	T40C1800
	X3064202	G1/4	Roller/spring	–	- 0,9 … 10	67	11	C02250828	C02470828	T40C2800
	X3045102	G1/8	Roller lever/spring	–	- 0,9 … 10	31	6	C02250618	C02470618	T40C1800
	X3065102	G1/4	Roller lever/spring	–	- 0,9 … 10	45	12	C02250828	C02470828	T40C2800
	X3039302	G1/8	Roller lever (heavy duty)/spring	–	- 0,9 … 10	31	7	C02250618	C02470618	T40C1800

Models – 5/2 manual valves

Accessories

	Model	Port size	Actuation	Colour	Operating pressure (bar)	Operating force (N)	Dimension No.	Straight fitting	Elbow fitting	Silencer
										
	X3046802	G1/8	Emergency stop/twist reset	Red	- 0,9 … 10	18	22	C02250618	C02470618	T40C1800
	X3045802801	G1/8	Key/key		- 0,9 … 10	–	29	C02250618	C02470618	T40C1800
	X3045902	G1/8	Rotary knob/knob reset		- 0,9 … 10	–	23	C02250618	C02470618	T40C1800
	X3046502	G1/8	Knob/knob	Black	- 0,9 … 10	22	27	C02250618	C02470618	T40C1800
	X3066502	G1/4	Knob/knob	Black	- 0,9 … 10	13	34	C02250618	C02470618	T40C1800
	X3046402	G1/8	Knob, push/knob, pull or pilot	Black	- 0,9 … 10 *	22	28	C02250618	C02470618	T40C1800
	X3047802	G1/8	Lever/spring	Black	- 0,9 … 10	16	38	C02250828	C02470828	T40C2800
	X3067802	G1/4	Lever/spring	Black	- 0,9 … 10	15	35	C02250618	C02470618	T40C1800
	X3029602	G1/8	Toggle/toggle	Black	- 0,9 … 10	13	24	C02250618	C02470618	T40C1800
	X3044302	G1/8	Toggle/spring	Black	- 0,9 … 10	48	25	C02250618	C02470618	T40C1800
	X3047702	G1/8	Toggle/lever	Black	- 0,9 … 10	13	38	C02250618	C02470618	T40C1800
	X3067702	G1/4	Toggle/lever	Black	- 0,9 … 10	13	35	C02250828	C02470828	T40C2800
	X3048202	G1/8	Pedal/spring	Black	- 0,9 … 10	22	30	C02250618	C02470618	T40C1800
	X3068202	G1/4	Pedal/spring	Black	- 0,9 … 10	22	37	C02250828	C02470828	T40C2800
	X3048402	G1/8	Pedal/pedal	Black	- 0,9 … 10	22	30	C02250618	C02470618	T40C1800
	X3068402	G1/4	Pedal/pedal	Black	- 0,9 … 10	22	37	C02250828	C02470828	T40C2800

* The operating pressure for pilot function is the minimum pressure to operate the valve. The valve may switch below this pressure.

Models – 5/3 manual valves

Accessories

	Model	Port size	Actuation	Colour	Operating pressure (bar)	Operating force (N)	Dimension No.	Straight fitting	Elbow fitting	Silencer
										
	X3343702	G1/8	Lever/lever/lever	Black	- 0,9 … 10	12	26	C02250618	C02470618	T40C1800
	X3363702	G1/4	Lever/lever/lever	Black	- 0,9 … 10	12	36	C02250828	C02470828	T40C2800

MANUALLY & MECHANICALLY ACTUATED SPOOL VALVE

Super X 3/2, 5/2 and 5/3, G1/8, G1/4

Dimensions

1

03040002

3/2 Plunger actuated spring return valve

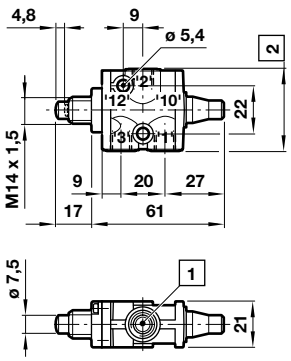

The plunger on this valve is designed for axial loading only.
Nut and mounting washer kit supplied as optional extra part number 03 0430 00

2

03040202

3/2 Roller actuated spring return valve

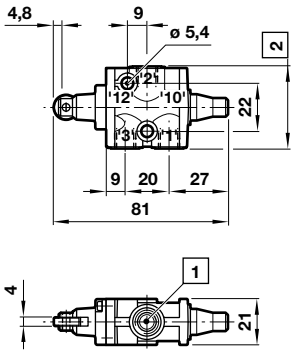

Maximum recommended cam rise: 4,5 mm
Cam angle of approach: 30° maximum
Cam speed: 8 m/min. maximum
Operating speed: 300 cpm

3

03041102

3/2 Roller lever actuated spring return valve

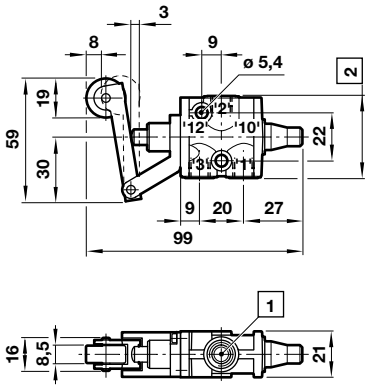

Operating travel: 8 mm
Over-travel: 3 mm
Cam angle of approach: 45° maximum
Cam speed: 8 m/min. maximum
Operating speed: 300 cpm

4

03029302

3/2 Heavy duty roller lever actuated spring return valve

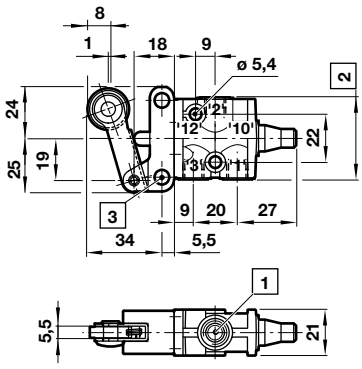

Operating Travel: 8 mm
Over-travel: 1 mm
Cam angle of approach: 45° maximum
Cam speed: 8 m/min. maximum
Operating speed: 300 cpm

5

X3044202

5/2 Roller actuated spring return valve

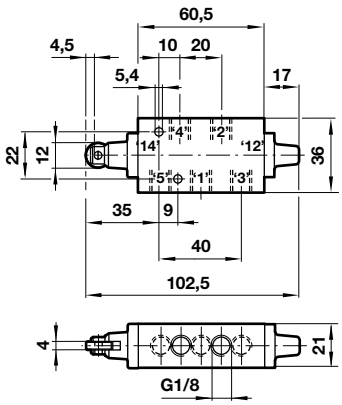

Maximum recommended can rise: 4,5 mm
Cam angle of approach: 30° maximum
Cam speed: 8 m/min. maximum
Operating speed: 300 cpm

6

X3045102

5/2 Roller lever actuated spring return valve

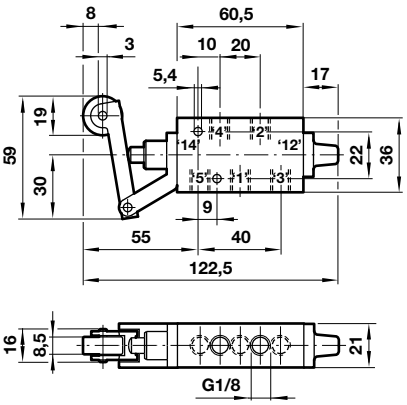

Operating travel: 8 mm
Over-travel: 3 mm
Cam angle of approach: 45° maximum
Cam speed: 8 m/min. maximum
Operating speed: 300 cpm

1 Port size G1/8 or ø 6 mm
2 37 mm for G1/8 and 45 mm for ø 6 mm
3 0,7 mm thick spacing washer must be used if additional mounting holes are used.

7

X3039302

5/2 Heavy duty roller lever actuated spring return valve

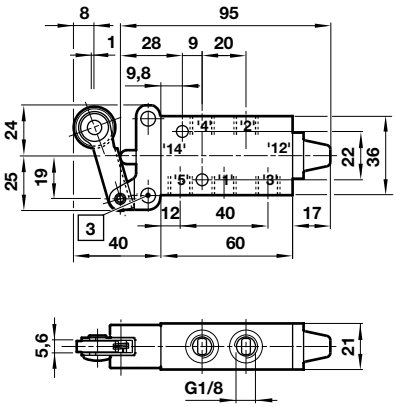

Operating travel: 8 mm
Over-travel: 1 mm
Cam angle of approach: 45° maximum
Cam speed: 8 m/min. maximum
Operating speed: 300 cpm

8

03060002

3/2 Plunger actuated spring return valve

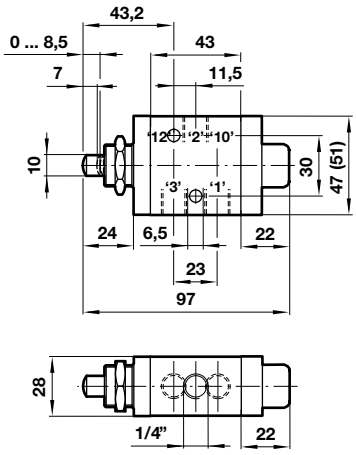

Panel hole: Ø 21 mm
The plunger on this valve is designed for axial loading only.

9

03060202

3/2 Roller actuated spring return valve

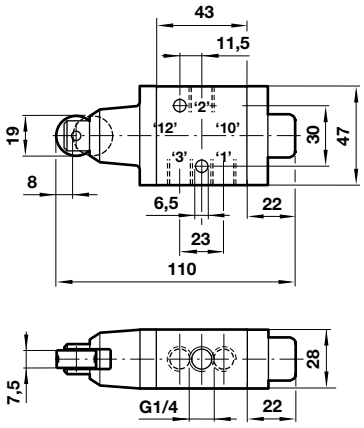

Cam angle of approach: 45° maximum
Cam speed: 6 m/min. maximum
Operating speed: 200 cpm

10

03061102

3/2 Roller lever actuated spring return valve

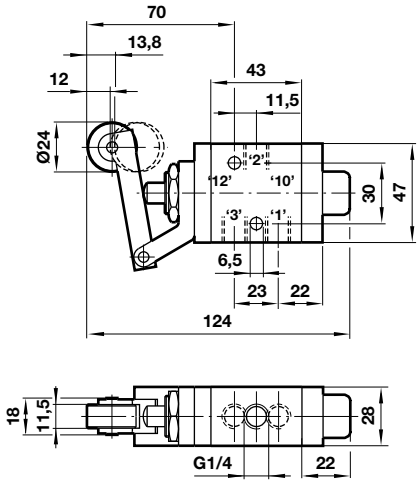

Cam angle of approach: 45° maximum
Cam speed: 5 m/min. maximum
Operating speed: 150 cpm

11

X3064202

5/2 Roller actuated spring return valve

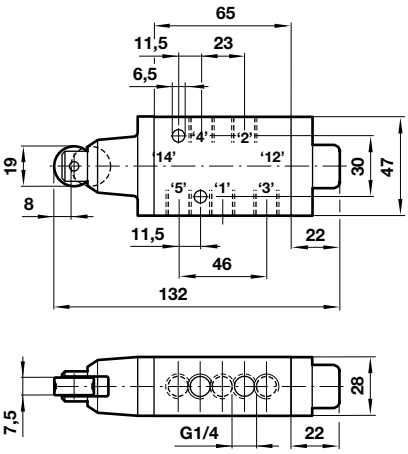

Cam angle of approach: 45° maximum
Cam speed: 6 m/min. maximum
Operating speed: 200 cpm

12

X3065102

5/2 Roller lever actuated spring return valve

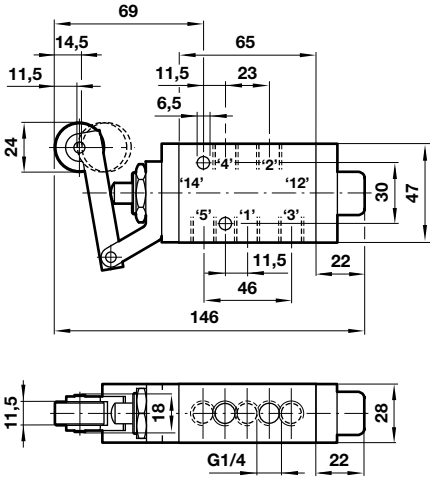

Cam angle of approach: 45° maximum
Cam speed: 5 m/min. maximum
Operating speed: 150 cpm

MANUALLY & MECHANICALLY ACTUATED SPOOL VALVE

Super X 3/2, 5/2 and 5/3, G1/8, G1/4

13

03040402, 03040602

3/2 Button operated spring return valves

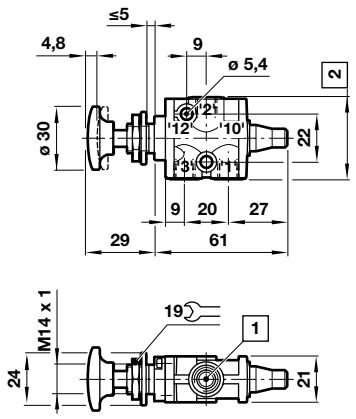

These valves are suitable for panel mounting by means of an optional nut and washer, reference 03 0430 00; a shrouded panel mounting kit is also available, reference 03 0429 00.

14

03041402, 03041502, 03041602

3/2 Button (Shrouded) operated spring return valves

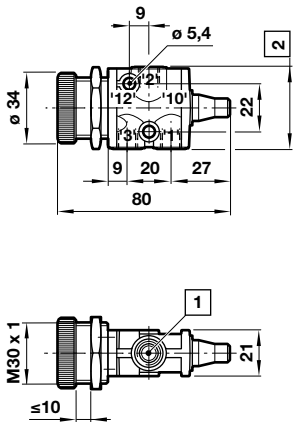

These valves are suitable for panel mounting.

15

03042802

3/2 Button (Palm) operated, twist return valve (Emergency stop)

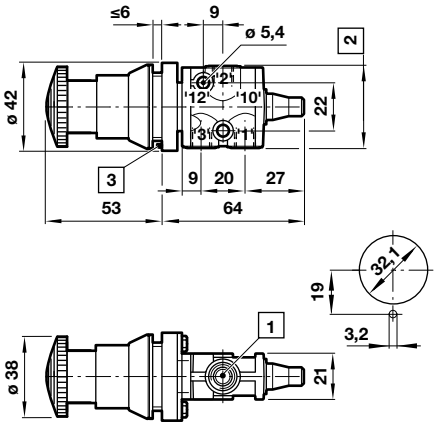

Valve latches when button is depressed and returns when the locking ring is rotated anti-clockwise. This valve is suitable for panel mounting.

16

03029602

3/2 Lever toggle spring return valve

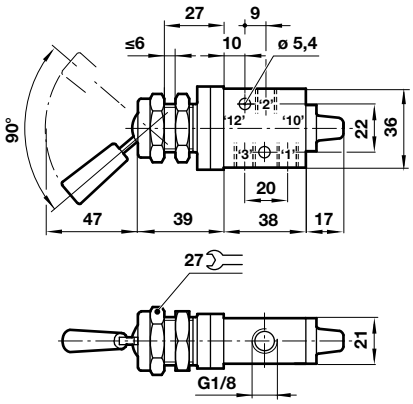

Panel hole: Ø 22,5 mm
This valve is suitable for panel mounting.

17

03040302

3/2 Toggle operated spring return valve

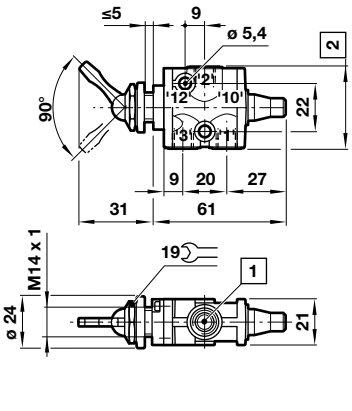

This valve is suitable for panel mounting.
A fingertip extension is available for this valve, reference 07003301.

18

03043802 & 03043702

3/2 Lever operated spring return valve

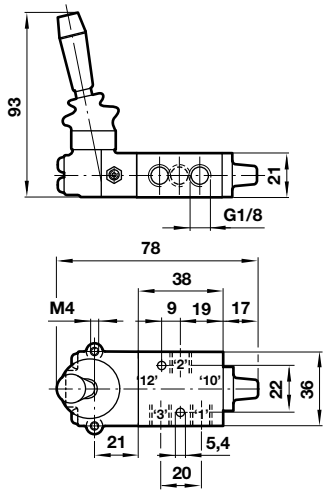

Model 03043702 features a positive detent.
Panel hole: Ø 24 mm
Panel thickness: 8 mm maximum

1 Port size G1/8 or ø 6 mm
2 37 mm for G1/8 and 45 mm for ø 6 mm
3 0,7 mm thick spacing washer must be used if additional mounting holes are used.

19

03042402

3/2 Knob operated, knob or pilot return valve

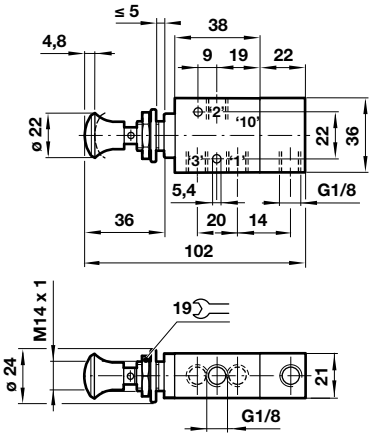

This valve is suitable for panel mounting by means of an optional nut and washer, reference 03 0430 00.

20

03041902

3/2 Rotary knob operated rotary knob return valve

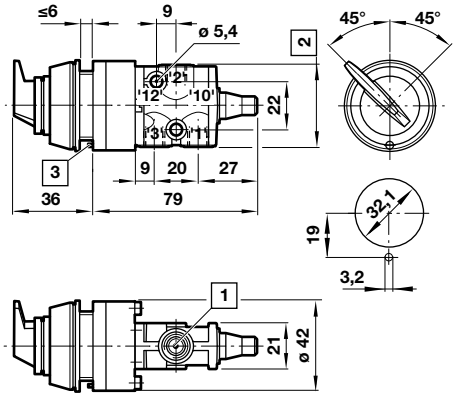

Switch shown in non-operated position
This valve is sutiable for panel mounting.

21

03048102

3/2 Pedal operated spring return valve

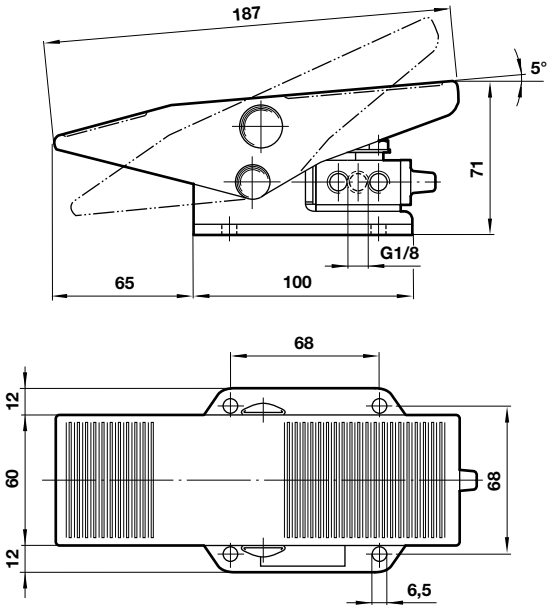

A foot guard is available for this valve, reference 03 0480 60.

22

X3046802

5/2 Button (Palm) operated spring return valves

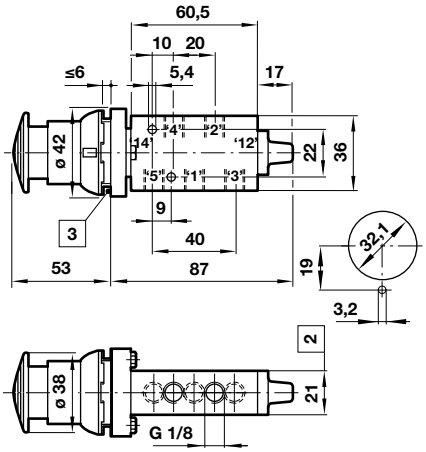

These valves are suitable for panel mounting.

1 Port size G1/8 or ø 6 mm
2 37 mm for G1/8 and 45 mm for ø 6 mm
3 0,7 mm thick spacing washer must be used if additional mounting holes are used.

MANUALLY & MECHANICALLY ACTUATED SPOOL VALVE

Super X 3/2, 5/2 and 5/3, G1/8, G1/4

23

X3045902

5/2 Rotary knob operated rotary knob return valve

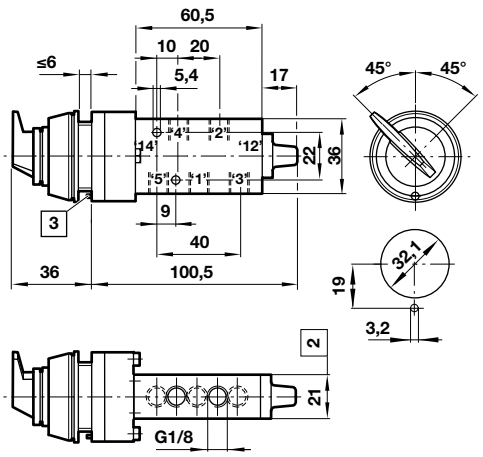

Switch shown in non-operated position
This valve is sutiable for panel mounting.

24

X3029602

5/2 Toggle operated toggle return valve

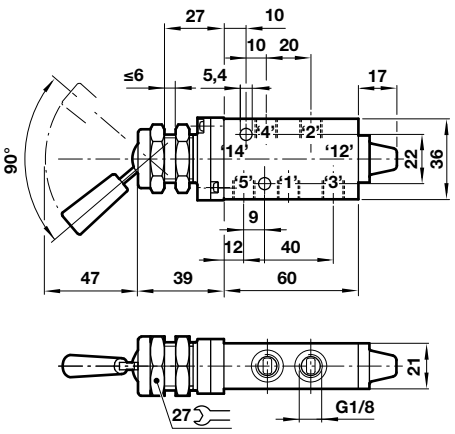

Panel hole: Ø 22,5 mm
This valve is suitable for panel mounting.

25

X3044302

5/2 Toggle operated spring return valve

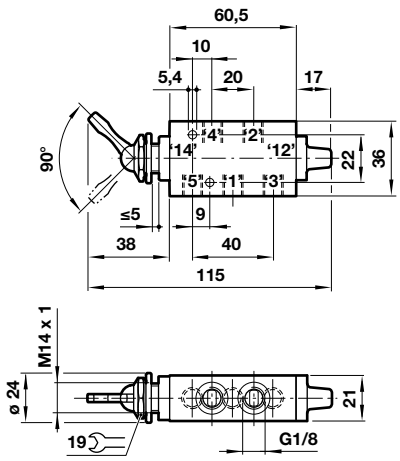

This valve is suitable for panel mounting.
A fingertip extension is available for use on this valve, reference 07 0033 01.

26

X3343702

5/3 Lever operated valves

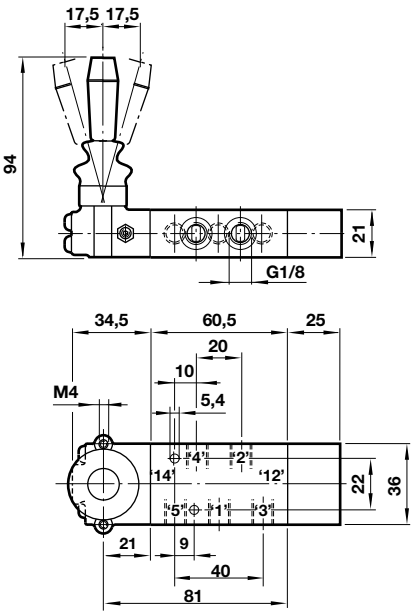

All models are suitable for panel mounting, by means of a bezel kit, reference 03 3437 64.
Panel hole: Ø 24 mm
Panel thickness: 8 mm maximum

27

X3046502

5/2 Knob operated knob return valve

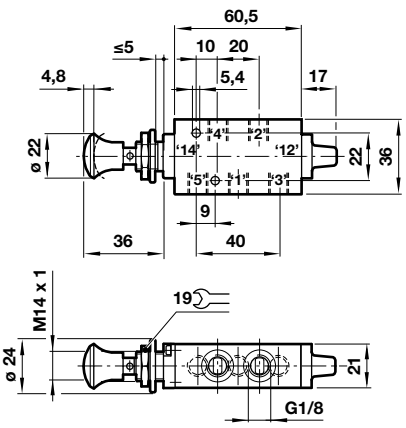

This valve is suitable for panel mounting by means of an optional nut and washer, reference 03043000.

1 Port size G1/8 or ø 6 mm
2 37 mm for G1/8 and 45 mm for ø 6 mm
3 0,7 mm thick spacing washer must be used if additional mounting holes are used.

28

X3046402
5/2 Knob operated, knob or pilot return valve

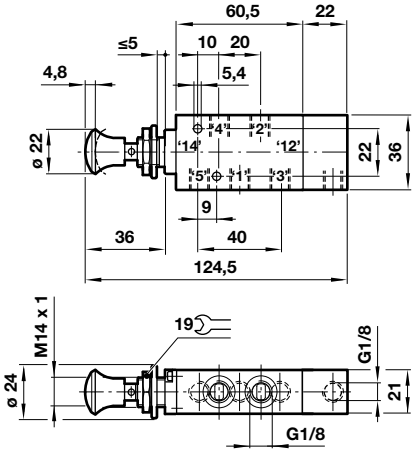

These valves are suitable for panel mounting by means of an optional nut and washer, reference 03043000

29

X3045802801
5/2 Key operated key return valve

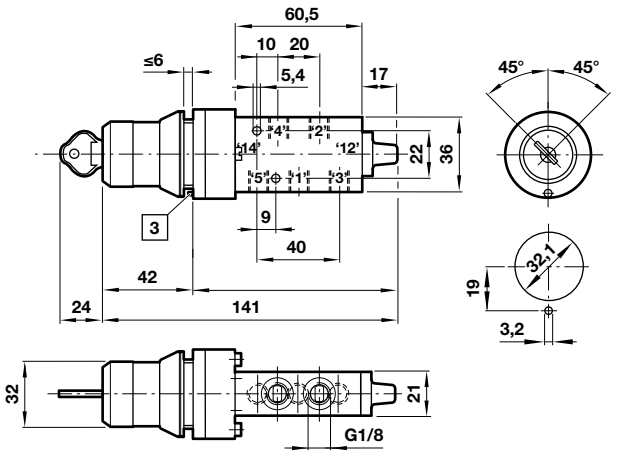

The key is removable in both positions.
Key slot shown in non-operated position.
Two keys are supplied.
This valve is suitable for panel mounting.

30

X3048202
5/2 Pedal operated spring return valve
X3048402
5/2 Pedal operated pedal return valve

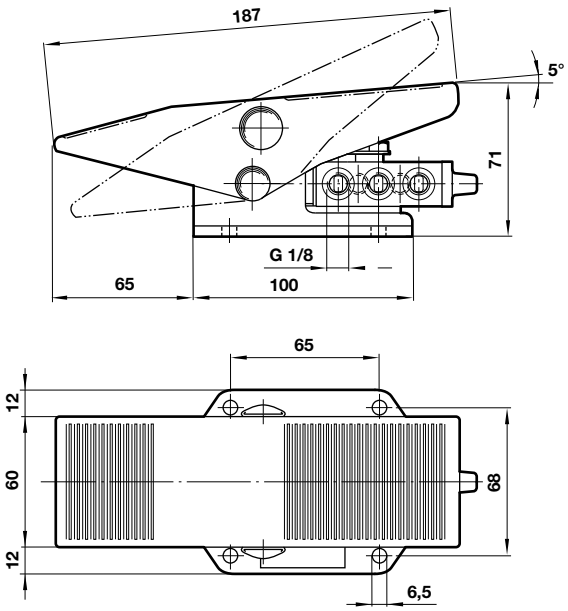

A foot guard is available for this valve, reference 03048060.

31

03068102
3/2 Pedal operated spring return valve

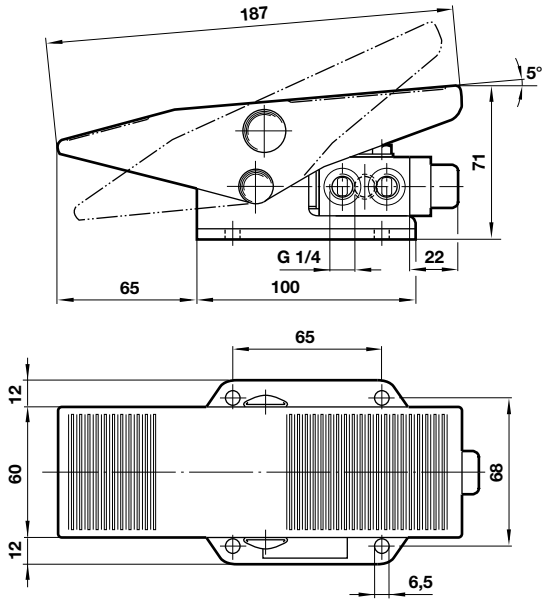

A foot guard is available for this valve, reference 03048060.

MANUALLY & MECHANICALLY ACTUATED SPOOL VALVE

Super X 3/2, 5/2 and 5/3, G1/8, G1/4

32

03062702

3/2 Knob operated, knob or pilot return valve

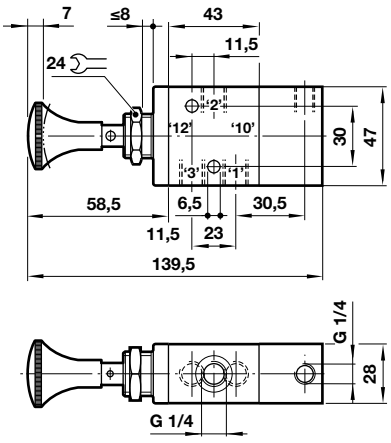

This valve is suitable for panel mounting and includes a nut and washer.
Panel hole: Ø 21 mm

33

03063702

3/2 Lever operated valve

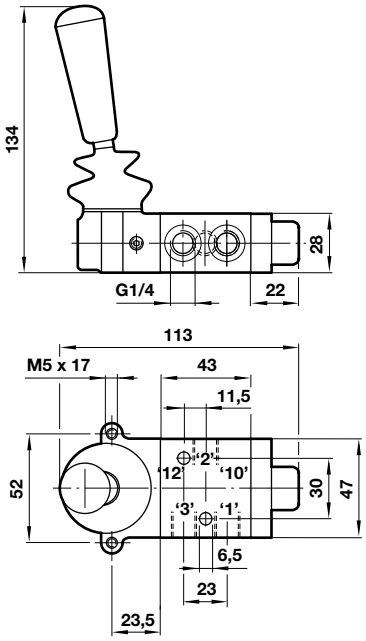

Model 03063702 features a positive detent in each position. Both models are suitable for panel mounting by means of a bezel kit,reference 03363764.
Panel hole: Ø 31 mm;
Panel thickness: 8 mm maximum

34

X3066502

5/2 Knob operated knob return valve

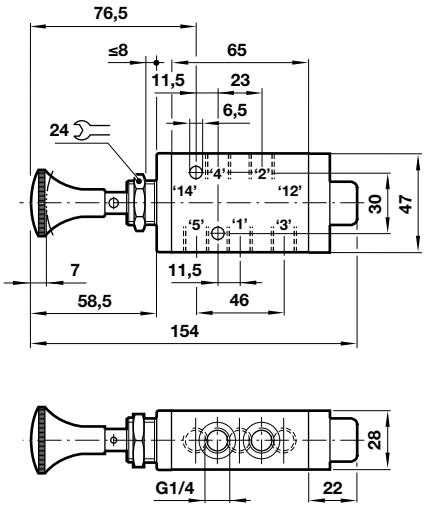

This valve is suitable for panel mounting and includes a nut and washer.
Panel hole: Ø 21 mm

35

X3067802, X3067702

5/2 Lever operated valve

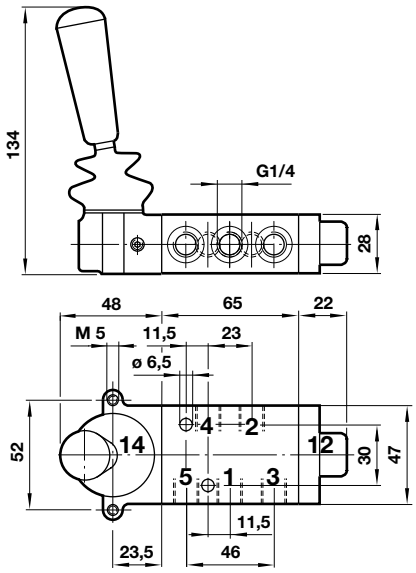

Model X3067702 features a positive detent in each position.
Both models are suitable for panel mounting by means of a bezel kit, reference 03363764.
Panel hole: Ø 31 mm
Panel thickness: 8 mm maximum

36

X3363702

5/3 Three position lever operated valves

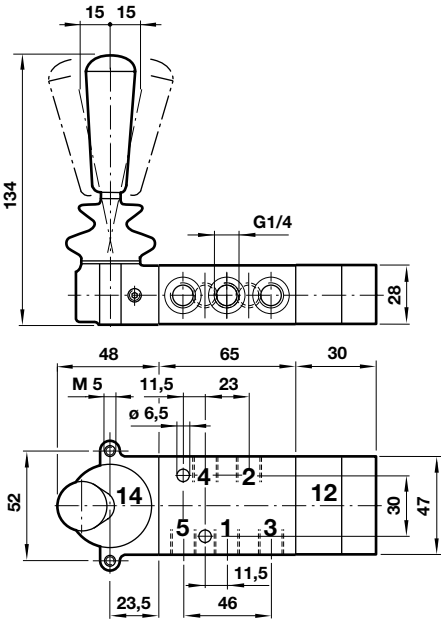

These valves are suitable for panel mounting by means of a bezel kit, reference 03363764.
Panel hole: Ø 31 mm
Panel thickness: 8 mm maximum

37

X3068202
5/2 Pedal operated spring return valve
X3068402
5/2 Pedal operated pedal return valve

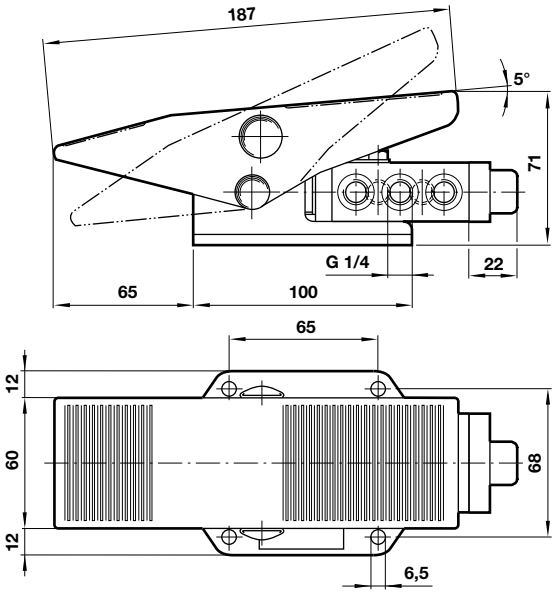

A foot guard is available for this valve, reference 03048060.

38

X3047802
5/2 Lever/spring
X3047702
5/2 Toggle/lever

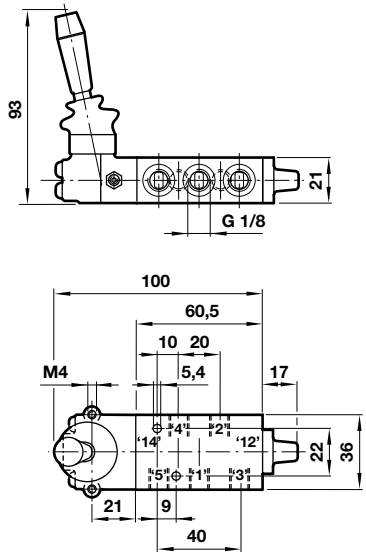

ROTARY HAND VALVE

VHLA 4/2, 4/3, G1/4 … G1/2

- Manually operated hand valve
- Easy to grasp and rotate handle
- Detented centre position
- Panel mounting option
- High flow

Technical Data

Medium:
Compressed air, filtered, lubricated and non-lubricated

Operating pressure:
0 … 9,7 bar

Flow:
400 … 3100 l/min

Ambient temperature:
-5°C … +60°C
Air supply must be dry enough to avoid ice formation at temperatures below +2°C

Materials

Body and cover:
Aluminium alloy

Seals:
NBR

Models

Accessories

Model	Port size	Function	Flow (l/min)	Panel mount nut	Straight fitting	Elbow fitting	Silencer
							
VHLA202-02G	G1/4	4/2	400	VHLA-200N	C02250828	C02470828	T40C2800
VHLA402-04G	G1/2	4/2	3100	VHLA-400N	C02251248	C02471248	T40C4800
VHLA200-02G	G1/4	4/3 APB	400	VHLA-200N	C02250828	C02470828	T40C2800
VHLA400-04G	G1/2	4/3 APB	3100	VHLA-400N	C02251248	C02471248	T40C4800

Caution: These valves are not leak free, care should be taken with safety critical applications and where an APB valve is used to hold an actuator in a mid position.
Installation: It is recommended that air pressure is applied only at port 1, otherwise leakage may occur - (ie. reverse porting is not recommended). It is recommended that a silencer is fitted in the exhaust port, particularly in applications where dust is present.

Dimensions

Panel mount nut

G1/4

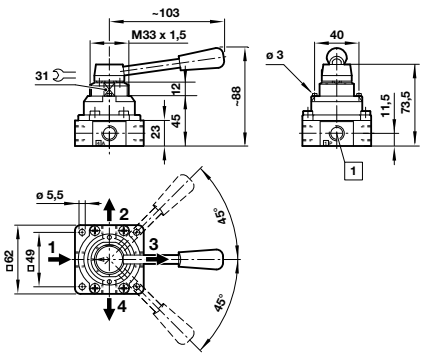

G1/2

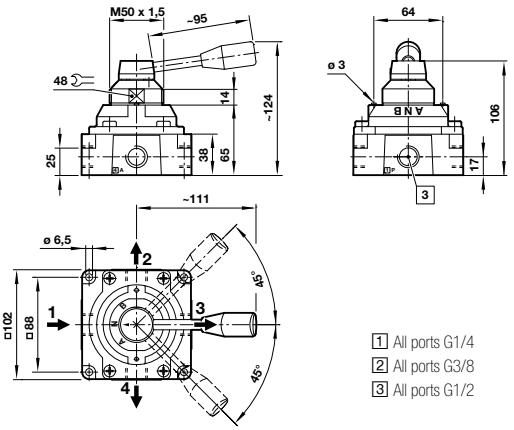

1 All ports G1/4
2 All ports G3/8
3 All ports G1/2

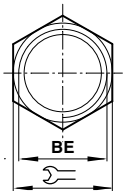

BE		KW	Model
M33x1,5	40	6	VHLA-200N
M50x1,5	55	8	VHLA-400N

MANUAL IN-LINE VALVE

M/1700 5/2, 5/3, G1/4, G1/2

- Compact, well proven range – perfectly suited to many applications
- Air assisted detent ensures positive valve location
- Simple servicing and sub-base mounting for reduced down-time

Technical Data

Medium:
Compressed air, filtered, lubricated and non-lubricated

Operating pressure:
2 … 10 bar

Flow:

Size	l/min
G1/4	1290
G1/2	3200

Ambient temperature:
-20°C … +80°C
Air supply must be dry enough to avoid ice formation at temperatures below +2°C

Models

Model	Size	Function	Actuation	Mid position
M/1702/177	G1/4	5/2	Lever/Lever	–
M/1702/87	G1/4	5/3	Lever/Lever/Lever	APB
M/1704/177	G1/2	5/2	Lever/Lever	–
M/1704/87	G1/2	5/3	Lever/Lever/Lever	APB
M/1704/687	G1/2	5/3	Lever/Spring/Lever	APB
M/1714/687	G1/2	5/3	Lever/Spring/Lever	COE

Dimensions

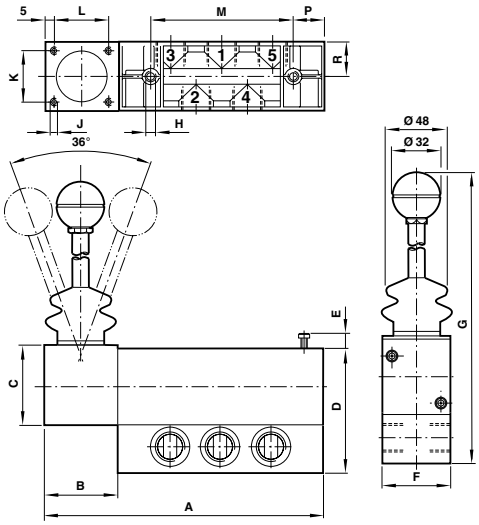

Model	A	B	C	D	E	F	G	H	J	K	L	M	P	R
M/1702	143,5	42	41,5	65	0,5	35	200,5	M6	M4	27	32	67,5	17	17,5
M/17*4	197	49	56,5	89,5	9,5	35	222,5	M8	M5	35,5	35,5	101,5	23	24

POPPET VALVE MANUAL/MECHANICAL

S/666 3/2 G1/8

- Long established and well-proven valves
- Compact size
- Normally closed and normally open models
- May also be used as 2/2 valves

Technical Data

Medium:
Compressed air, filtered, lubricated and non-lubricated

Operation:
Poppet valves, directly actuated

Mounting:
Through-holes in valve body

Port Size:
G1/8

Operating Pressure:
2 … 10 bar

Flow:
666 range = 174 l/min
667 range = 156 l/min

Ambient temperature:
-20°C … +80°C
Air supply must be dry enough to avoid ice formation at temperatures below +2°C

Models

Model	Function	Actuation	Dimension No.
Pilot			
S/666/40	3/2 NC	Pilot/Spring	9
S667/40	3/2 NO	Pilot/Spring	9
Mechanical			
S/666/14	3/2 NC	Plunger/Spring	7
S/666/8	3/2 NC	Roller/Spring	8
S/667/8	3/2 NO	Roller/Spring	8
S/666/108	3/2 NC	Variable Roller/Spring	1
S/666/106	3/2 NC	Variable Rod/Spring	2
S/666/116	3/2 NC	Antenna Spring/Spring	3
Manual			
S/666/1	3/2 NC	Button/Spring	6
S/666/7	3/2 NC	Lever/Lever (Panel mounting)	5
S/666/117	3/2 NC	Lever (long)/Lever (panel mounting)	4

Dimensions

1-S/666/108

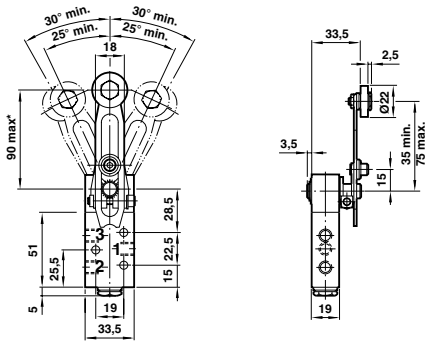

Mechanism may be operated either side of centre line. When the valve is mounted horizontally, the roller is recommended to be positioned on the upper face of the arm.
*Alternative position

2- S/666/106

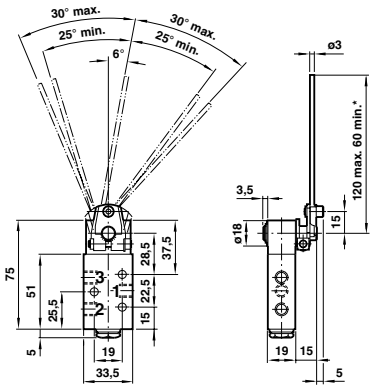

Mechanism may be operated either side of centre line.
*Recommended

3-S/666/116

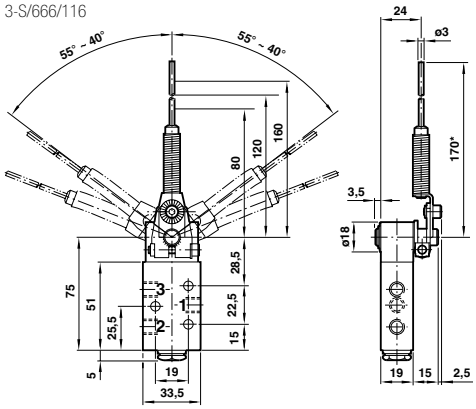

*Rotation at Point of Application: 40° minimum @ 80 mm, 50° minimum @ 120 mm, 55° minimum @ 160 mm.
Mechanism may be operated either side of centre line.

4-S/666/117

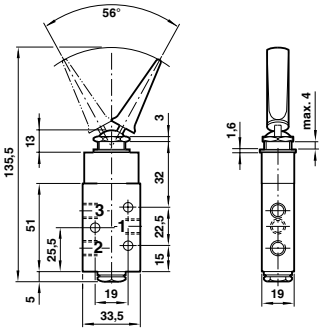

Panel hole: ø 16 mm
Panel thickness: 4 mm maximum

5-S/666/7

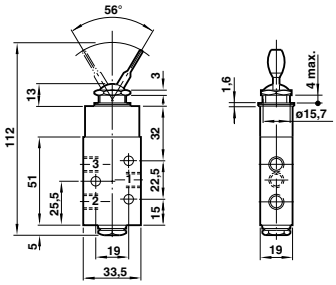

Panel hole: ø 16 mm
Panel thickness: 4 mm maximum

6-S/666/1

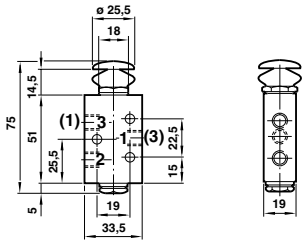

7-S/666/14

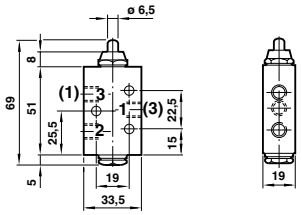

Pre-travel: 0,8 mm closed top seat
Operating Travel: 0,8 mm open bottom seat
Over-travel: 1,5 mm
Model number S/667/14 type 3/2 normally open numbers are shown in brackets.

8-S/666/8 & S/667/8

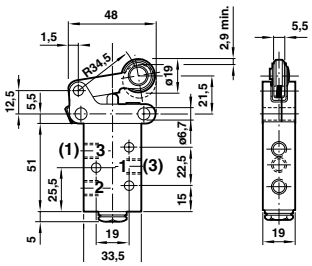

Pre-travel: 1,4 mm closed top seat
Operating Travel: 1,4 mm open bottom seat
Over-travel: 2,2 mm
Model number S/667/8 type 3/2 normally open numbers are shown in brackets.

9-S/666/40 & S/667/40

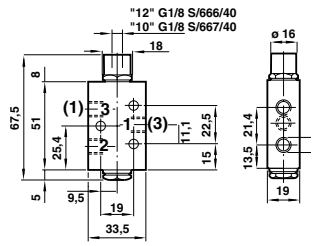

PROPORTIONAL PRESSURE CONTROL VALVE

VP50S G1/4

- Closed loop air pilot operated proportional pressure control valve with pressure output display
- Fast response time
- High flow
- Excellent performance characteristics
- Adjustable gain
- Adjustable pressure range
- Low power consumption
- Feedback signal
- Manifold mountable

Technical Data

Medium:
Compressed air, filtered to 5 µm, dry and oil free

Operation:
Air piloted spool valve with integrated electronic pressure control

Supply pressure:
Minimum 2 bar above maximum output required, 12 bar max.

Supply sensitivity:
Better than 0,75% span output change per bar supply pressure change

Flow:
Standard units up to 1400 N l/min (see characteristic curves)

Air consumption:
<5 N l/min

Ambient temperature:
0°C … +50°C
Air supply must be dry enough to avoid ice formation at temperatures below +2°C

Linearity:
<1%

Hysteresis and deadband:
<1%

Models

Accessories

Model	Port size	Flow (l/min)	Output pressure (bar)	Control signal	Straight fitting	Elbow fitting	Silencer	Connector with 5m moulded cable
								
VP5006SBJ111H00	G1/4	1400	0 … 6	0 … 10 V	C02250828	C02470828	T40C2800	0250081000000000
VP5006SBJ411H00	G1/4	1400	0 … 6	4 … 20 mA	C02250828	C02470828	T40C2800	0250081000000000
VP5010SBJ111H00	G1/4	1400	0 … 10	0 … 10 V	C02250828	C02470828	T40C2800	0250081000000000
VP5010SBJ411H00	G1/4	1400	0 … 10	4 … 20 mA	C02250828	C02470828	T40C2800	0250081000000000

Electrical information

Electromagnetic compatibility	CE marked: conforms to EC requirements EN 50081-2 (1994) and EN 50082-2 (1995)
Electrical input signal	4 … 20 mA or 0 … 10 V factory set
Electrical power input	24 V d.c. ±25% (power consumption <1 W)
Output pressure feedback signal	0 … 10 V full range, <±1% Accuracy
Connections	M12x1, 5 pin

Pin configuration

1	+24 V d.c. supply
2	0 … 10V feedback
3	Control signal (+VE)
4	Common (supply signal and feedback return)
5	Chassis

Dimensions

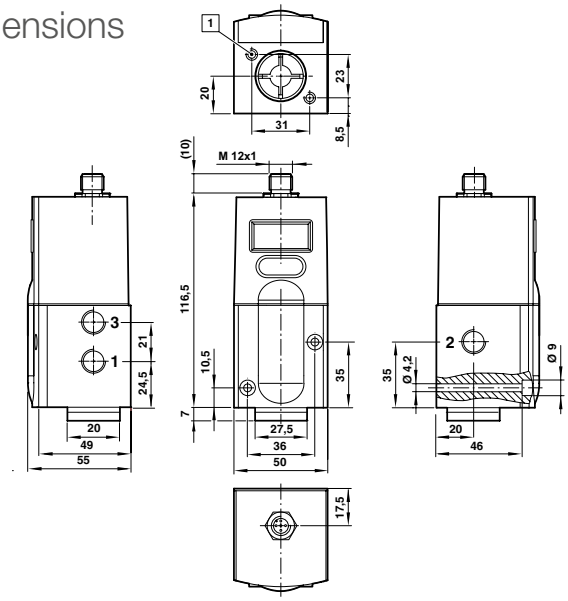

PROPORTIONAL PRESSURE CONTROL VALVE

VP51 Programmable G1/4

- Closed loop air pilot digital proportional control valve
- Fully programmable with on-board diagnostics
- Ability to set up offline
- Multi-language menu option
- Password protection option at first level functionality
- Instant LED warning functions
- Pressure output display; no gauge necessary
- High speed response

Technical Data

Medium:
Compressed air, filtered to 5 µm, dry and oil free

Output pressure:
User adjustable up to 10 bar

Supply pressure:
Minimum 2 bar above maximum output required, 12 bar max

Ambient temperature:
0°C … +50°C
Air supply must be dry enough to avoid ice formation at temperatures below +2°C

Air Supply sensitivity:
Better than 0,75% span output change per bar supply pressure change

Flow:
Standard units up to 1400 N l/min (see characteristic curves)

Air consumption:
<5 N l/min

Linearity:
<1%

Hysteresis and deadband:
<1%

Models

Model	Port size	Max. flow (l/min)	Output pressure (bar)	Control signal
				
VP5110BJ111H00	G1/4	1200	0 … 10	0 … 10 V
VP5110BJ411H00	G1/4	1200	0 … 10	4 … 20 mA

Accessories

Straight fitting	Elbow fitting	Silencer	Connector with 5m moulded cable
			
C02250828	C02470828	T40C2800	0250081000000000
C02250828	C02470828	T40C2800	0250081000000000

Electrical information

Electromagnetic compatibility	CE marked: conforms to EC requirements EN 50081-2 (1994) and EN 50082-2 (1995)
Electrical input signal	4 … 20 mA or 0 … 10 V factory set
Electrical power input	24 V d.c. ±25% (power consumption <1 W)
Output pressure feedback signal	0 … 10 V full range or user-configurable switched output
Connections	M12 5 pin

Pin configuration

1	+24 V d.c. supply
2	0 … 10 V feedback
3	Control signal (+ve)
4	Common (DC supply signal and feedback return)
5	Chassis

Dimensions

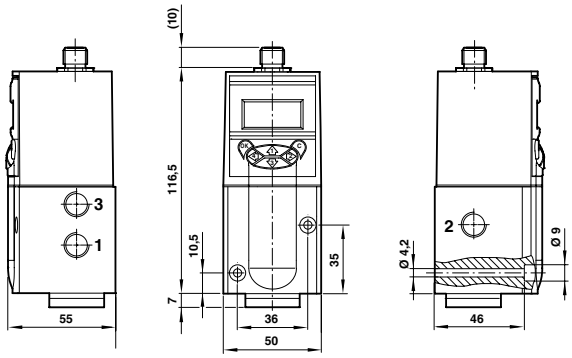

Valve technology
for over 75 years

IMI Buschjost
valves

The constant research and continuing innovation behind the IMI Buschjost name has helped to create a market leader in process and multimedia valves, which can be found in a huge variety of applications worldwide.

In fact, in Germany, IMI Buschjost process valves are amongst only three brands which are SIL certified for use in power plants.

SOLENOID OPERATED VALVES

- Port sizes from G1/4 to G2 plus options of flange connections
- Range of body and seal materials to cover most industrial applications
- Extensive use of patented IMI Buschjost Click-on® coils
- ATEX versions available
- Diaphragm (up to 16 bar) and piston (up to 40 bar versions available)
- Range covers direct, indirect and forced lift versions

PRESSURE OPERATED VALVES

- Port sizes G1/4 to G2
- Diaphragm and piston versions available up to 16 bar depending upon size and actuator type
- Range of body and seal materials to cover most industry applications
- Suitable for fluid viscosities up to 600 centistokes and fluids with contamination
- Solenoid pilot operator available to directly mount to the valve actuator

CLICK-ON® BENEFITS

- Valve core tube completely sealed – fluid cannot escape
- Solenoid can be removed and replaced without tools
- Can be rotated through 360°
- Cannot be over tightened leading to damage to valve
- Totally IP65 protected

Engineering
GREAT Solutions

Find out more
www.imi-precision.com

IMI BUSCHJOST®

IMI Precision Engineering

For further information, visit **www.imi-precision.com** and use the new improved search function. If you cannot see the option you require please contact us.

2/2-WAY DIRECTLY OPERATED VALVES

Series 82510

- 2/2-way seat valves
- G1/4 … 3/8
- Suitable for vacuum
- High flow rate
- Functional compact design
- Body with M5 fastening thread as standard
- Solenoid interchangeable without tools (Click-on®)
- Valve operates without pressure differential (Zero delta P)

Technical Data

Switching function:
Normally closed

Flow direction:
Determined

Mounting position:
Optional, preferably solenoid vertical on top

Models - Valves normally closed

Port size	Orifice (mm)	Series 82510 Model	Operating pressure (bar)
G1/4	1,5	8251000.9101.xxxxx	0 … 25
G1/4	2,5	8251020.9101.xxxxx	0 … 10
G3/8	2,5	8251120.9101.xxxxx	0 … 10
G1/4	3	8251040.9101.xxxxx	0 … 4
G1/4	4	8251060.9151.xxxxx	0 … 12
G3/8	4	8251160.9151.xxxxx	0 … 12

Replace xxxxx with Voltage code & frequency from the table below

Technical data

	82510
Medium	Neutral gases and liquids
Port size	G1/4 … 3/8
Operating pressure	0 … 10/25/4 bar
Temperature	
Media temperature	-10°C … +90°C
Ambient temperature	-10°C … +50°C
Material	
Body	Brass (CW617N)
Seat seal	NBR
Internal parts	Stainless steel, brass

Voltage codes and spare coils

Voltage and frequency solenoid									
Model		**Code Voltage**	**Code Frequency**	**Voltage**	**Frequency**	**Power consumption**			
9101	**9151**					**Inrush**	**Holding**	**Inrush**	**Holding**
						9101 *1)		**9151 *1)**	
0000000.9101.02400	0000000.9151.02400	024	00	24 V d.c.	–	8 W	8 W	18 W	18 W
0000000.9101.23050	0000000.9151.23050	230	50	230 V a.c.	50 Hz	15 VA	12 VA	45 VA	35 VA

*1) Note: r coil only / up to +55°C ambient temperature.
Further versions on request!

Dimensions

82510 with solenoid 9101

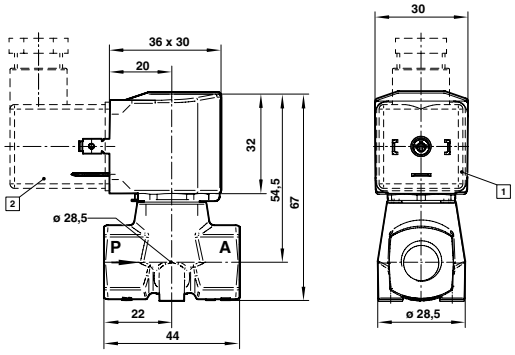

82510 with solenoid 9151

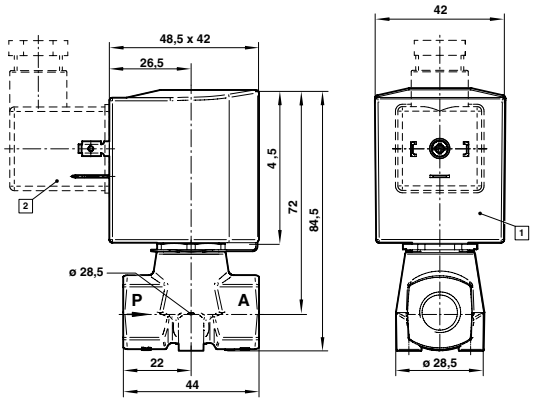

1 Solenoid rotatable 360°
2 Socket turnable 4 x 90° (Socket included)

2/2-WAY INDIRECLY OPERATED SOLENOID VALVES

Series 82400

- 2/2-way seat valves
- DN 8 … 50, G1/4 … 2
- High flow rate
- Damped operation
- Functional compact design
- Solenoid interchangeable without tools (Click-on®)
- Fluids of Group 2 acc. Pressure Equipment Directive 97/23/EC (Series 83030)

Technical Data

Switching function:
Normally closed

Flow direction:
Determined

Mounting position:
Optional, preferably solenoid vertical on top

Differential pressure:
0,1 bar required

Standard models

Port size	Orifice (mm)	Series 82400 Model	Operating pressure (bar)
G1/4	8	8240000.9101.xxxxx	0,1 … 16
G3/8	10	8240100.9101.xxxxx	0,1 … 16
G1/2	12	8240200.9101.xxxxx	0,1 … 16
G3/4	20	8240300.9101.xxxxx	0,1 … 16
G1	25	8240400.9101.xxxxx	0,1 … 16
G1 1/4	32	8240500.9101.xxxxx	0,1 … 10 *1)
G1 1/2	40	8240600.9101.xxxxx	0,1 … 10 *1)
G2	50	8240700.9101.xxxxx	0,1 … 10 *1)

*1) Note: Operating pressure 0,1 … 16 bar with solenoid 9151.
Replace xxxxx with voltage code & frequency from the table below

Technical data

	82400 (82410)
Medium	Neutral gases and liquids
Port size	G1/4 … 2
Operating pressure	0,1 … 10/16 bar
Temperature	
Media temperature	-10°C … +90°C
Ambient temperature	-10°C … +50°C
Material	
Body	Brass (CW617N)
Seat seal	NBR
Internal parts	Stainless steel, PVDF, brass from DN 25

Voltage codes and spare coils

Voltage and frequency solenoid									
Model		**Code Voltage**	**Code Frequency**	**Voltage**	**Frequency**	**Power consumption**			
9101	**9151**					**Inrush**	**Holding**	**Inrush**	**Holding**
						9101 *2)		**9151*2)**	
0000000.9101.02400	0000000.9151.02400	024	00	24 V d.c.	–	8 W	8 W	18 W	18 W
0000000.9101.23050	0000000.9151.23050	230	50	230 V a.c.	50 Hz	15 VA	12 VA	45 VA	35 VA

*2) Note: r coil only / up to +55°C ambient temperature.
Further versions on request!

Dimensions

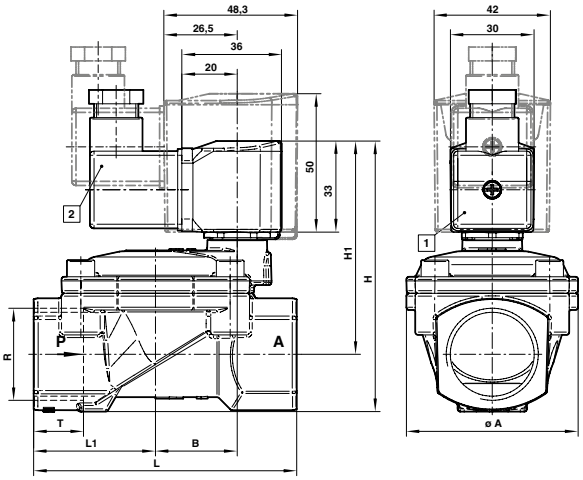

1 Solenoid rotatable 360°
2 Socket turnable 4 x 90° (Socket included)

Model	Port size	A	B	H	H1	L	L1	T
8240000.9101.xxxxx	G1/4	44	19,5	78,5	67	60	27,5	12
8240100.9101.xxxxx	G3/8	44	19,5	78,5	67	60	27,5	12
8240200.9101.xxxxx	G1/2	44	19,5	81	67	67	31	14
8240300.9101.xxxxx	G3/4	50	24	88	71,5	80	36,5	16
8240400.9101.xxxxx	G1	62	29,5	97,5	77	95	44	18
8240500.9101.xxxxx	G1 1/4	92	44,5	124,5	95,5	132	60	20
8240600.9101.xxxxx	G1 1/2	92	44,5	124,5	95,5	132	60	22
8240700.9101.xxxxx	G2	109	54,5	142,5	108	160	74	24

Replace xxxxx with voltage code & frequency from the voltage codes table

2/2-WAY PRESSURE ACTUATED VALVES BY EXTERNAL FLUID

Series 84500

- 2/2-way seat valves
- DN 15 … 50, G1/2 … 2
- Easy rebuilding into »normally open« or »double-acting« without tools
- Optical position indicator is standard
- Damped closing (Valve closes against flow direction)
- Suitable for contaminated flow fluid
- Suitable for vacuum up to max. 90%
- Reversed flow direction optional

Technical Data

Switching function:
Normally closed

Flow direction:
Determined

Mounting position:
Optional, preferably solenoid vertical on top

Standard models

Port size	Series 84500 Model	Operating pressure (bar)
G1/2	8450200.0000.00000	0 … 16 (25)
G3/4	8450300.0000.00000	0 … 10 (16)
G1	8450400.0000.00000	0 … 10
G1 1/4	8450500.0000.00000	0 … 7
G1 1/2	8450600.0000.00000	0 … 4,5
G2	8450700.0000.00000	0 … 3

Technical data

	84500
Medium	Neutral gases and liquids
Pilot fluid	Neutral gases max. +60°C
Port size	G1/2 … 2
Operating pressure	0 … 25 bar (depends on port size)
Pilot pressure	3,5 … 10 bar
Temperature	
Media temperature	-10°C … +180°C
Ambient temperature	-10°C … +60°C
Material Process fluid	
Body	Brass (CW617N)
Seat seal	PTFE
Internal parts	Brass, stainless steel
Material Pilot fluid	
Body	Polyamid 66 with glass fibre 30%
Seals	NBR
Internal parts	Brass, stainless steel

Dimensions

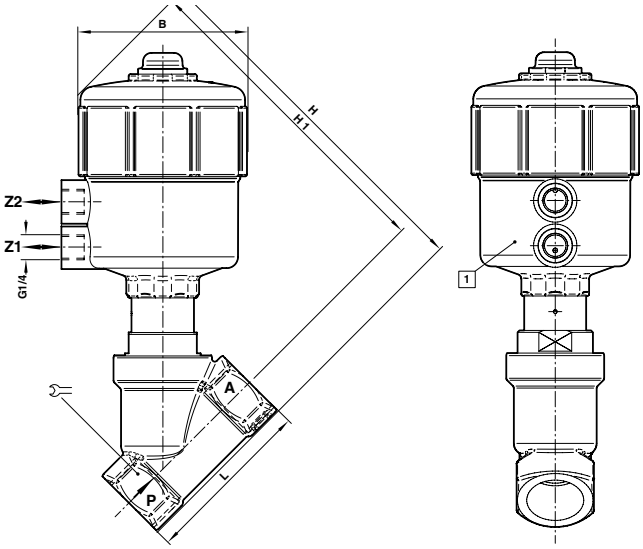

1 Actuator may be rotated 360°

Model	Port size	B	H	H1	L	
8450200.0000.00000	G1/2	89,5	177,5	164	65	27
8450300.0000.00000	G3/4	89,5	184	168	75	32
8450400.0000.00000	G1	89,5	194,5	174	90	41
8450500.0000.00000	G1 1/4	89,5	209,5	184,5	110	50
8450600.0000.00000	G1 1/2	89,5	208,5	186	120	55
8450700.0000.00000	G2	89,5	229,5	194,5	150	70

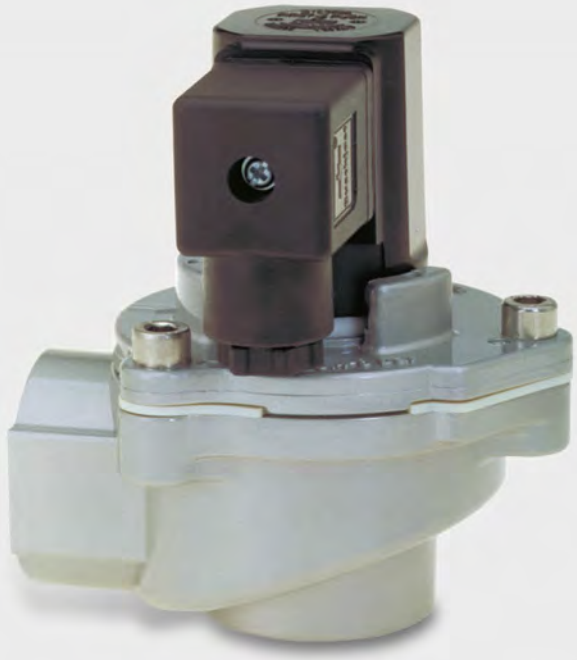

Efficient and inexpensive dust filter cleaning

Filter valves for air-blasting have been developed to allow efficient and inexpensive cleaning. Top priorities in the developers' requirements specification were to optimise the filter cleaning, reduce air consumption and prolong the valves' service life. To achieve optimum cleaning with the compressed air pulse, the pressure in the filter has to reach the set point very quickly. This means that the valves must open fully within a few milliseconds.

Compared with the previous models, the IMI Buschjost filter valve series has extremely fast opening times, which are essential for effective, intensive cleaning. The closing mechanism is just as fast as the opening mechanism. This determines the economical operation of a valve. The air pulse must return to zero as quickly as possible, as any minor delay will only consume air and cost money.

Product highlight:

- High grade materials
- Solenoid exchangeable without tools (TWIST-ON®)
- CE-mark
- Optimized strength
- Designed with newest CAD-technologies
- High flow rate
- One-piece diaphragm
- Usable from -40 ... +140°C
- High corrosion resistance (optional)
- Explosion proof up to hazardous area 1/21 and temperature class T4/ T5
- Usable for low pressure- and vacuum applications
- Integrated silencer
- Frost proof solenoid system
- International registrations like GOST-R or CRN available

Engineering GREAT Solutions

Find out more
www.imi-precision.com

IMI BUSCHJOST®

DIRECT SOLENOID ACTUATED POPPET VALVES

95000 2 … 6 mm orifice (ND) 2/2, NC/NO, G1/4

- Direct acting solenoid – operation down to zero bar pressure
- Short switching times
- Assembled oil and grease-free

Technical Data

Medium:
Neutral gaseous and liquid fluids

Flow direction:
Fixed

Mounting position:
Optional, preferably with solenoid on top

Media temperature:
-25°C … +80°C NBR

Ambient temperature:
Depending on solenoid system
-25°C … +80°C
Air supply must be dry enough to avoid ice formation at temperatures below +2°C
For contaminated fluids installation of an upstream filter is recommended

Models

Model	Function	Port size	Orifice (mm)	Operating pressure (bar)	Flow (l/min)	Solenoid group	Dimension No.
							
9500200xxxx*****	2/2 NC	G1/4	2	0 … 35	120	13B	1
9500300xxxx*****	2/2 NC	G1/4	3	0 … 10	200	13C	1
9500400xxxx*****	2/2 NC	G1/4	4	0 … 12	350	13D	1
9501500xxxx*****	2/2 NC	G1/4	5	0 … 5	450	16D	2
9501600xxxx*****	2/2 NC	G1/4	6	0 … 5	550	16D	2
9502210xxxx*****	2/2 NO	G1/4	2	0 … 40	70	13B	3
9502310xxxx*****	2/2 NO	G1/4	3	0 … 10	160	13B	3

xxxx Insert solenoid code according to solenoid group from tables on page 129. ***** Insert voltage codes from table below.
Replace both xxxx and ***** with 'O' for valve without solenoid.

Voltage codes

24 V d.c.	02400
230 V a.c.	23050

Other voltages available, please call your please contact us.

Dimensions

1

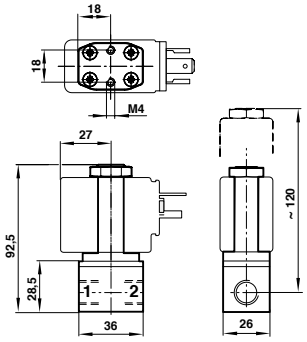

2

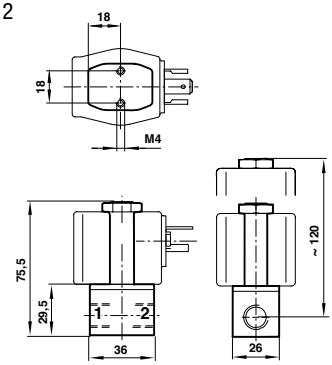

3

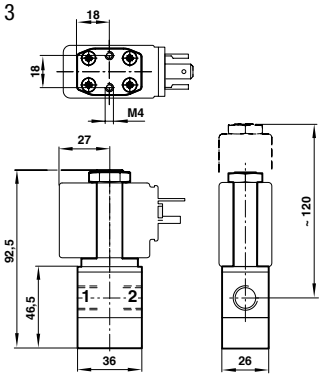

DIRECT SOLENOID ACTUATED POPPET VALVES

96000 2 … 5 mm orifice (ND) 3/2, NC/NO, G1/4

- Direct acting solenoid – operation down to zero bar pressure
- Short switching times
- Assembled oil and grease-free

Technical Data

Medium:
Neutral gaseous and liquid fluids

Flow direction:
Fixed

Mounting position:
Optional, preferably with solenoid on top

Media temperature:
-25°C … +80°C NBR

Ambient temperature:
Depending on solenoid system
-25°C … +80°C
Air supply must be dry enough to avoid ice formation at temperatures below +2°C
For contaminated fluids installation of an upstream filter is recommended

Models

Model	Function	Port size	Orifice (mm)	Operating pressure (bar)	Flow l/min	Solenoid group	Dimension No.
							
9600210xxxx*****	3/2 NC	G1/4	2	0 … 10	120	13B	1
9600240xxxx*****	3/2 NC	G1/4	2	0 … 18	120	13D	1
9600340xxxx*****	3/2 NC	G1/4	3	0 … 14	200	13D	1
9601430xxxx*****	3/2 NC	G1/4	4	0 … 8	350	16C	2
9601440xxxx*****	3/2 NC	G1/4	4	0 … 10	350	16D	1
9601540xxxx*****	3/2 NC	G1/4	5	0 … 7	450	16D	2
9602210xxxx*****	3/2 NO	G1/4	2	0 … 9	100	13B	3
9602340xxxx*****	3/2 NO	G1/4	3	0 … 9	160	13D	3
9602440xxxx*****	3/2 NO	G1/4	4	0 … 6	300	16D	3

xxxx Insert solenoid code according to solenoid group from tables on page 129. ***** Insert voltage codes from table below.
Replace both xxxx and ***** with '0' for valve without solenoid.

Voltage codes

24 V d.c.	02400
230 V a.c.	23050

Other voltages available, please call your please contact us.

Dimensions

1

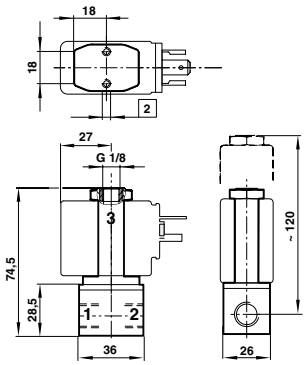

2

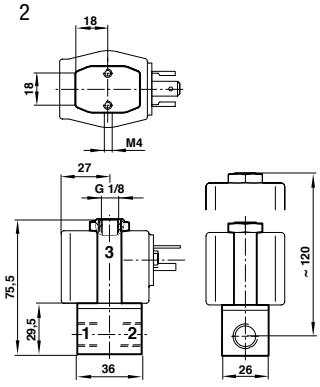

3

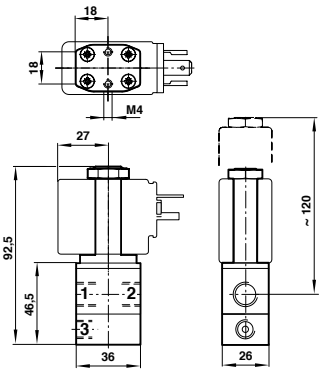

SOLENOID OPERATORS
95000 & 96000 Poppet Valves

Model	Power consumption 24 V d.c. (W)	Power consumption 230 V a.c. (VA)	Voltage 24 V d.c. (mA)	Voltage 230 V a.c. (mA)	Protection category	Protection class	Temperatures °C ambient/fluid	Electrical connection	Solenoid code
									
Group 13B	8,0	–	331	–	–	IP 65 (with connector) [5]	-25 … +60 Fluid: max. 80	DIN EN 175301-803 Form A [6]	0246 [7]
Group 13B	–	9,2	–	40	–	IP 65 (with connector) [5]	-25 … +60 Fluid: max. 80	DIN EN 175301-803 Form A [6]	3206 [7]

Model	Power consumption 24 V d.c. (W)	Power consumption 230 V a.c. (VA)	Voltage 24 V d.c. (mA)	Voltage 230 V a.c. (mA)	Protection category	Protection class	Temperatures °C ambient/fluid	Electrical connection	Solenoid code
									
Group 13C	12,1	–	504	–	–	IP 65 (with connector) [5]	-25 … +60 Fluid: max. 80	DIN EN 175301-803 Form A [6]	0200 [7]
Group 13C	–	11,3	–	49	–	IP 65 (with connector) [5]	-25 … +60 Fluid: max. 80	DIN EN 175301-803 Form A [6]	3204 [7]

Model	Power consumption 24 V d.c. (W)	Power consumption 230 V a.c. (VA)	Voltage 24 V d.c. (mA)	Voltage 230 V a.c. (mA)	Protection category	Protection class	Temperatures °C ambient/fluid	Electrical connection	Solenoid code
									
Group 13D	16,9	–	703	–	–	IP 65 (with connector) [5]	-25 … +60 Fluid: max. 80	DIN EN 175301-803 Form A [6]	0700 [7]
Group 13D	–	19,5	–	75	–	IP 65 (with connector) [5]	-25 … +60 Fluid: max. 80	DIN EN 175301-803 Form A [6]	3703 [7]

Model	Power consumption 24 V d.c. (W)	Power consumption 230 V a.c. (VA)	Voltage 24 V d.c. (mA)	Voltage 230 V a.c. (mA)	Protection category	Protection class	Temperatures °C ambient/fluid	Electrical connection	Solenoid code
									
Group 16C	6,8	–	284	–	–	IP 65 (with connector) [5]	-25 … +60 Fluid: max. 80	DIN EN 175301-803 Form A [6]	0827 [7]
Group 16C	–	10,6	–	46	–	IP 65 (with connector) [5]	-25 … +60 Fluid: max. 80	DIN EN 175301-803 Form A [6]	3805 [7]

Model	Power consumption 24 V d.c. (W)	Power consumption 230 V a.c. (VA)	Voltage 24 V d.c. (mA)	Voltage 230 V a.c. (mA)	Protection category	Protection class	Temperatures °C ambient/fluid	Electrical connection	Solenoid code
									
Group 16D	16,9	–	703	–	–	IP00 without plug [5] IP65 with plug [5]	-25 … +60	DIN EN 175301-803 Form A [6]	0800 [7]
Group 16D	–	17,3	–	75	–	IP00 without plug [5] IP65 with plug [5]	-25 … +60	DIN EN 175301-803 Form A [6]	3803 [7]

Standard voltages 24 V d.c., 230 V a.c. Other voltages on request.
Design acc. to VDE 0580, EN 50014/50028. 100% duty cycle.
5) Required connector type 0570275000000000.
6) Connector/cable gland not supplied, see 'Accessories' table.
7) Suitable for outdoor installation only if equipped with a special protection (e.g. cubicle installation).

Accessories

Connectors

0570275000000000

IN-LINE FLOW REGULATORS (BLOCK FORM)

C00GE and C00GP Uni-directional – Ø 4 … 12

- High flow performance
- In-line or panel mounting
- Adjustment can be locked
- Captive regulator needle will not blow out when unscrewed
- Nickel plated brass components provide corrosion and contamination resistance and an extended life

Technical Data

Medium:
Compressed air, filtered, lubricated and non-lubricated

Operating pressure:
10 bar max.

Ambient temperature:
0°C … +60°C
Air supply must be dry enough to avoid ice formation at temperatures below +2°C

Tube sizes:
4 … 12 mm

Tubing types:
Nylon 11 or 12, Polyurethane 85, 95 or 98 durometer

Models – In-line flow control

Model	ØA	B	C	C1 min.	C1 max.	D	E	ØK	N
C00GE0400	4	12	45	30	33	3,3	15	11	13,5
C00GE0600	6	16	50	35	39,5	4,4	20,5	13	17,5
C00GE0800	8	19	55,5	37,5	42	4,4	23	15	20
C00GE1000	10	23	61	44	49	4,4	28	17,5	23
C00GE1200	12	26,5	70	47,5	53,5	4,4	32	20,5	25,5

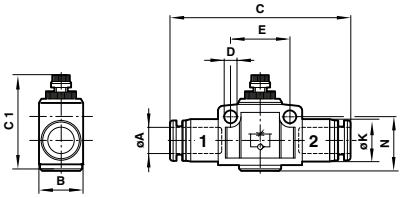

Models – In-line and panel mounting flow control

Model	ØA	B	C	C1 min.	C1 max.	C2	D	E	ØK	N		Panel hole	Panel thickness
C00GP0400	4	12	42	35,5	38	5,5	3,2	15,5	11	13,5	12	11	5
C00GP0600	6	16	49,5	43	48,5	8	4,3	20,5	13	17,5	17	16	6
C00GP0800	8	19	56,5	47,5	53	8,5	4,3	23	15	20	19	17	6
C00GP1000	10	23	63	53,5	61,5	10,5	4,3	27,5	17,5	23	22	17	7
C00GP1200	12	26,5	73,5	57,5	64,5	12	4,4	32,5	20,5	25,5	24	21	7

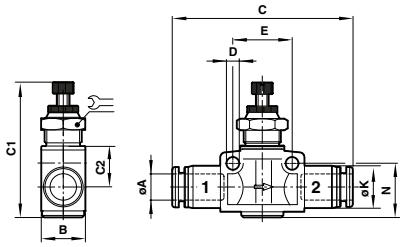

NON-RETURN VALVES

T55 In-line G1/8 … G1/2

- Permit free flow of air in one direction only
- Simple, reliable design
- Silicone free
- Low cracking pressure

Technical Data

Medium:
Compressed air, filtered, lubricated and non-lubricated

Operating pressure:
0,1 … 10 bar

Ambient temperature:
-20°C … +80°C
Air supply must be dry enough to avoid ice formation at temperatures below +2°C

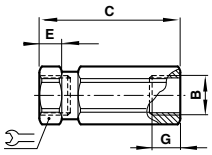

Models

BSPP	Port size	Flow factor C*	CV
T55C1800	1/8	2,4	0,59
T55C2800	1/4	5,5	1,35
T55C3800	3/8	9,0	2,20
T55C4800	1/2	15,0	3,70

* Measured in dm^3/(s.bar).

Dimensions

Model	B	C	E	G	
T55C1800	G1/8	42,5	7	7	14
T55C2800	G1/4	54	8	10	17
T55C3800	G3/8	63	9	13,5	24
T55C4800	G1/2	77	12	13,5	27

SHUTTLE VALVE

T65 G1/8 & G1/4

- Allow two independent signal sources to be connected to a common pilot line
- Can be used to perform an 'OR' logic function
- Can be combined to operate from three or more sources
- Valves can be ganged together

Technical Data

Medium:
Compressed air, filtered, lubricated or non-lubricated, inert gas

Operation:
Shuttle valve ('OR' logic function)

Operating pressure:
0,7 … 10 bar

Port size:
G 1/8, G 1/4

Mounting:
Line mounted

Ambient temperature:
-20°C … +80°C max.
Air supply must be dry enough to avoid ice formation at temperatures below +2°C

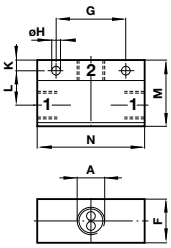

Models

Model	A	F	Ø H	K	L	M	N
T65C1800	G1/8	15	5,25	6	10	25	36
T65C2800	G1/4	20	5,25	8	12	30	50

Dimensions

Model	Port size	Flow factor C *1)	Cv	Flow at 6 - 1 bar (dm^3/min)
T65C1800	G 1/8	1,7	0,42	412
T65C2800	G 1/4	2,6	0,64	631

*1) Measured in dm^3/(s.bar).

SOLENOID PLUGS AND CABLES

15 mm, 22 mm & 30 mm

15 mm plugs according to DIN EN175301-803 form C

Connector	Model	Connector type	Cable length	Voltage a.c.	Voltage d.c.	Features	Suppression	Protection class	Gland size	Power consumption
Plug with moulded cable 	V10013-D01	DIN EN175301-803	1000 mm	–	–	–	–	IP 65	Pg 7	–
	V10013-D03	DIN EN175301-803	3000 mm	–	–	–	–	IP 65	Pg 7	–
Plug with cable gland 	V10027-D00	DIN EN175301-803	–	–	–	–	–	IP 65	Pg 7	–
Indicator plug 	V10012-D13	DIN EN175301-803	–	12 … 24 V	12 … 24 V	LED,VDR	•	IP 65	Pg 7	0,25W
	V10012-D18	DIN EN175301-803	–	110 V	110 V	LED,VDR	•	IP 65	Pg 7	0,25W
	V10012-D19	DIN EN175301-803	–	220 V	220 V	LED,VDR	•	IP 65	Pg 7	0,25W
Indicator plug with moulded cable 	V10014-D03	DIN EN175301-803	3000 mm	24 V	24 V	LED,VDR	•	IP 65	Pg 7	0,25W
	V10015-D03	DIN EN175301-803	3000 mm	110 V	110 V	LED,VDR	•	IP 65	Pg 7	0,25W
	V10016-D03	DIN EN175301-803	3000 mm	220 V	220 V	LED,VDR	•	IP 65	Pg 7	0,25W

22 mm plugs according to Industrial standard or DIN EN175301-803 form B

Connector	Model	Connector type	Cable length	Voltage a.c.	Voltage d.c.	Features	Suppression	Protection class	Gland size	Power consumption
Plug with moulded cable 	M/P43313/1	22 mm Industrial std.	1000 mm	–	–	–	–	IP 65	Pg 9	–
	M/P43313/3	22 mm Industrial std.	3000 mm	–	–	–	–	IP 65	Pg 9	–
Plug with cable gland 	M/P19063	22 mm Industrial std.	–	–	–	–	–	IP 65	Pg 9	–
Indicator plug 	M/P24121/1	22 mm Industrial std.	–	12 … 24 V	12 … 24 V	LED,VDR	•	IP 65	Pg 9	0,25W
	M/P24121/2	22 mm Industrial std.	–	110 V	110 V	LED,VDR	•	IP 65	Pg 9	0,25W
	M/P24121/3	22 mm Industrial std.	–	220 V	220 V	LED,VDR	•	IP 65	Pg 9	0,25W
Indicator plug with moulded cable 	M/P43314/13	22 mm Industrial std.	3000 mm	24 V	24 V	LED,VDR	•	IP 65	Pg 9	0,25W
	M/P43314/23	22 mm Industrial std.	3000 mm	110 V	110 V	LED,VDR	•	IP 65	Pg 9	0,25W
	M/P43314/33	22 mm Industrial std.	3000 mm	220 V	220 V	LED,VDR	•	IP 65	Pg 9	0,25W

30 mm plugs according to DIN EN175301-803 form A

Connector	Model	Connector type	Cable length	Voltage a.c.	Voltage d.c.	Features	Suppression	Protection class	Gland size	Power consumption
Plug with moulded cable 	M/P43315/1	DIN EN175301-803	1000 mm	–	–	–	–	IP 65	Pg 11	–
	M/P43315/3	DIN EN175301-803	3000 mm	–	–	–	–	IP 65	Pg 11	–
Plug with cable gland 	M/P15737	DIN EN175301-803	–	250 V	300 V	–	–	IP 65	Pg 11	–
	M/P19117	DIN EN175301-803	–	–	240 V	–	–	IP 65	Pg 11	–
	0570275000000000	DIN EN175301-803	–	250 V	300 V	–	–	IP 65	Pg 11	–
	0663303000000000	DIN EN175301-803	–	12 … 250 V	12 … 250 V	–	–	IP 65	Pg 11	–
	0570110000000000	DIN EN175301-803	–	12 … 240 V	12 … 240 V	–	–	IP 65	Pg 11	–
Indicator plug 	M/P24120/1	DIN EN175301-803	–	10 … 50 V	10 … 50 V	LED,VDR	•	IP 65	Pg 11	0,25W
	M/P24120/2	DIN EN175301-803	–	70 … 115 V	70 … 115 V	LED,VDR	•	IP 65	Pg 11	0,25W
	M/P24120/3	DIN EN175301-803	–	150 … 240 V	150 … 240 V	LED,VDR	•	IP 65	Pg 11	0,25W
Indicator plug with moulded cable 	M/P43316/13	DIN EN175301-803	3000 mm	24 V	24 V	LED,VDR	•	IP 65	Pg 11	0,25W
	M/P43316/23	DIN EN175301-803	3000 mm	110 V	110 V	LED,VDR	•	IP 65	Pg 11	0,25W
	M/P43316/33	DIN EN175301-803	3000 mm	220 V	220 V	LED,VDR	•	IP 65	Pg 11	0,25W

Pressure Switches

A comprehensive range of Pressure Switches, providing a range of different options for converting pressure changes into an electrical signal. The range includes electromechanical and electronic switches suitable for pneumatic and all fluid applications.

Strong, versatile

Light, compact, easy to use

Fast Find Guide

Please note: These products represent only part of the IMI Precision Engineering pressure switch range. If you can't see the option you require please contact us.

Electro-Mechanical Pressure Switches

18D Pneumatic
-1 … 30 bar

Page 135

18D Hydraulic
5 … 420 bar

Page 136

Electronic Pressure Switches

51D Pneumatic
-1 … 10 bar

Page 137

ELECTRO-MECHANICAL PRESSURE SWITCH

18D Pneumatic -1 … 30 bar

- Gold-plated contacts
- High cycle life
- Vibration resistant to 15 g
- Microswitch approved by UL and CSA
- Intrinsically safe operation

Technical Data

Medium:
For filtered, lubricated or non lubricated compressed air, neutral and incombustible gases

Operation:
Diaphragm

Ambient temperature:
-10°C … +85°C
except for ATEX versions
Air supply must be dry enough to avoid ice formation at temperatures below +2°C

Repeatability:
±4%, of full scale

Dimensions

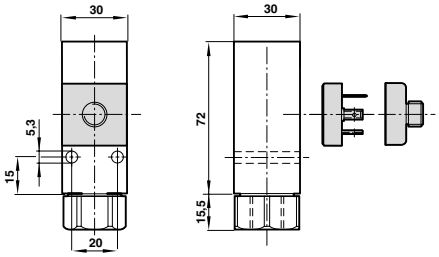

Models

Accessories

Standard Model	Pressure range (bar)	Fluid connection	Electrical connection	Switching pressure difference (bar)	Max. over pressure (bar)	Plug	Electrical connector M12 x 1 Straight x 2 m long	90° x 2 m long
								
0880100000000000	-1 … 0	G1/4	DIN EN 175301-803 Form A	0,15 … 0,18	80	–	–	–
0880110000000000	-1 … 1	G1/4	DIN EN 175301-803 Form A	0,25 … 0,35	80	–	–	–
0880200000000000	0,2 … 2	G1/4	DIN EN 175301-803 Form A	0,20 … 0,35	80	–	–	–
0880300000000000	0,5 … 8	G1/4	DIN EN 175301-803 Form A	0,35 … 0,85	80	–	–	–
0880400000000000	1 … 16	G1/4	DIN EN 175301-803 Form A	0,40 … 1,20	80	–	–	–
0880600000000000	1 … 30	G1/4	DIN EN 175301-803 Form A	1,00 … 5,00	80	–	–	–
0880326000000000*	0,5 … 8	G1/4	DIN EN 175301-803 Form A	0,35 … 0,85	80	0570110000000000	–	–
0881200000000000	0,2 … 2	Flange	DIN EN 175301-803 Form A	0,20 … 0,35	80	–	–	–
0881300000000000	0,5 … 8	Flange	DIN EN 175301-803 Form A	0,35 … 0,85	80	–	–	–
0881400000000000	1 … 16	Flange	DIN EN 175301-803 Form A	0,40 … 1,20	80	–	–	–
0880360000000000	0,5 … 8	G1/4	M12 x 1	0,35 … 0,85	80	–	0523057000000000	0523058000000000
0880460000000000	1 … 16	G1/4	M12 x 1	0,40 … 1,20	80	–	0523057000000000	0523058000000000
MODELS FOR WATER APPLICATIONS								
0880323000000000	0,5 … 8	G1/4	DIN EN 175301-803 Form A	0,35 … 0,85	80	0570110000000000	–	–
MODELS CONFORMING TO ATEX – ZONE 2 AND 22 (Ex II 3G/D)								
0880380000000000	0,5 … 8	G1/4	DIN EN 175301-803 Form A	0,35 … 0,85	80	–	–	–
0880480000000000	1 … 16	G1/4	DIN EN 175301-803 Form A	0,40 … 1,20	80	–	–	–

* Switch is LABS free, plug needs to be ordered separately, all other DIN connector versions include standard connector plug.

ELECTRO-MECHANICAL PRESSURE SWITCH

18D Hydraulic 5 … 420 bar

- Microswitch with gold plated contacts
- High number of switching cycles
- Vibration resistant to 15 g
- Microswitch approved by UL and CSA
- Intrinsically safe operation

Technical Data

Medium:
For neutral, self lubricating fluids, e.g. hydraulic oil, lube oil, light fuel oil

Operation:
Piston type sensor system

Ambient/Media temperature:
-25°C … +80°C
Air supply must be dry enough to avoid ice formation at temperatures below +2°C

Media viscosity:
Up to 1000 mm²/s

Repeatability:
±4%, of full scale

Dimensions

G1/4

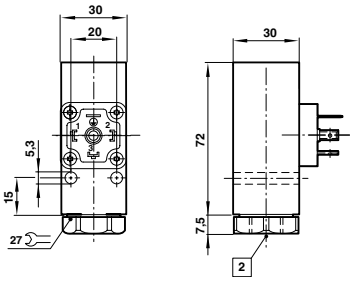

Flange

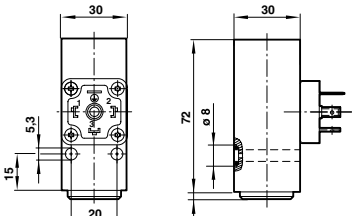

Models

Accessories

Standard Model	Pressure range (bar)	Fluid connection	Electrical connection	Switching pressure difference (bar)	Max. over pressure (bar)	Connector DIN EN 175301-803
						
0882100000000000	5 … 70	G1/4	DIN EN 175301-803 Form A	10,5 … 15	400	0570110000000000 (Form A)
0882200000000000	10 … 160	G1/4	DIN EN 175301-803 Form A	11 … 17	400	0570110000000000 (Form A)
0882300000000000	25 … 250	G1/4	DIN EN 175301-803 Form A	11 … 17	400	0570110000000000 (Form A)
0882400000000000	40 … 420	G1/4	DIN EN 175301-803 Form A	17 … 38	600	0570110000000000 (Form A)

All versions include standard connector plug.

ELECTRONIC PRESSURE SWITCH

51D Pneumatic -1 … 10 bar

- System pressure (unit bar, psi, Mpa, KPa, kgf/cm², mmHg, InHg or mmH$_2$O) selectable
- High accuracy and resolution
- Switching status indicated by LED

Technical Data

Medium:
For filtered, lubricated or non lubricated compressed air, neutral and incombustible gases

Ambient temperature:
0°C … +50°C
Air supply must be dry enough to avoid ice formation at temperatures below +2°C

Display:
3 1/2 digit LED

Repeatability (switch output):
≤ ±0,2% of full scale (FS) ±1 digit
- without temperature sensitivity

Dimensions

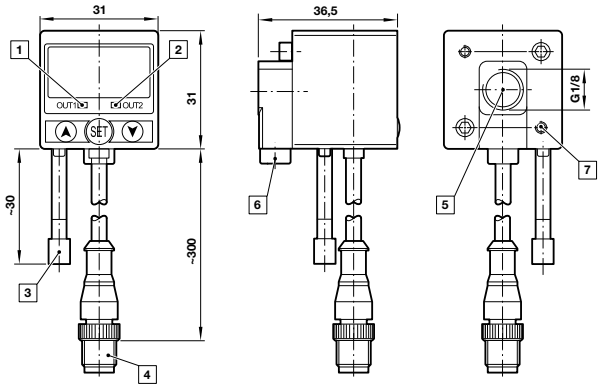

1 Switch OUT 1, green LED
2 Switch OUT 2, red LED
3 Dustproof protector
4 Connector M12 x 1
5 Inlet port
6 Alternative inlet port G1/8 plugged
7 Thread for mounting screw

Electrical parameters

Electrical connection:	M12 x 1
Power supply:	12 … 24 V d.c.
	24 V d.c. (PNP) maximum
	30 V d.c. (NPN) maximum

Electrical connection M12 x 1

PIN-No.	Signal	Cable colour
1	+UB	Brown
2	Out 2	White
3	–	Blue
4	Out 1	Black

Models

Accessories

Model	Port size	Switching pressure range (bar)	Over pressure (bar)	Output signal	Mounting bracket (wall mounting)	Mounting bracket (bottom mounting)	Panel mounting kit (safety adaptor & panel adaptor)
							
0860810000000000	G 1/8	-1 … 10	15	2 x PNP	0860000000000000	0860001000000000	0860002000000000 & 0860003000000000
0860815000000000	G 1/8	-1 … 10	15	2 x NPN	0860000000000000	0860001000000000	0860002000000000 & 0860003000000000
0860820000000000	G 1/8	-1 … 1	3	2 x PNP	0860000000000000	0860001000000000	0860002000000000 & 0860003000000000
0860825000000000	G 1/8	-1 … 1	3	2 x NPN	0860000000000000	0860001000000000	0860002000000000 & 0860003000000000

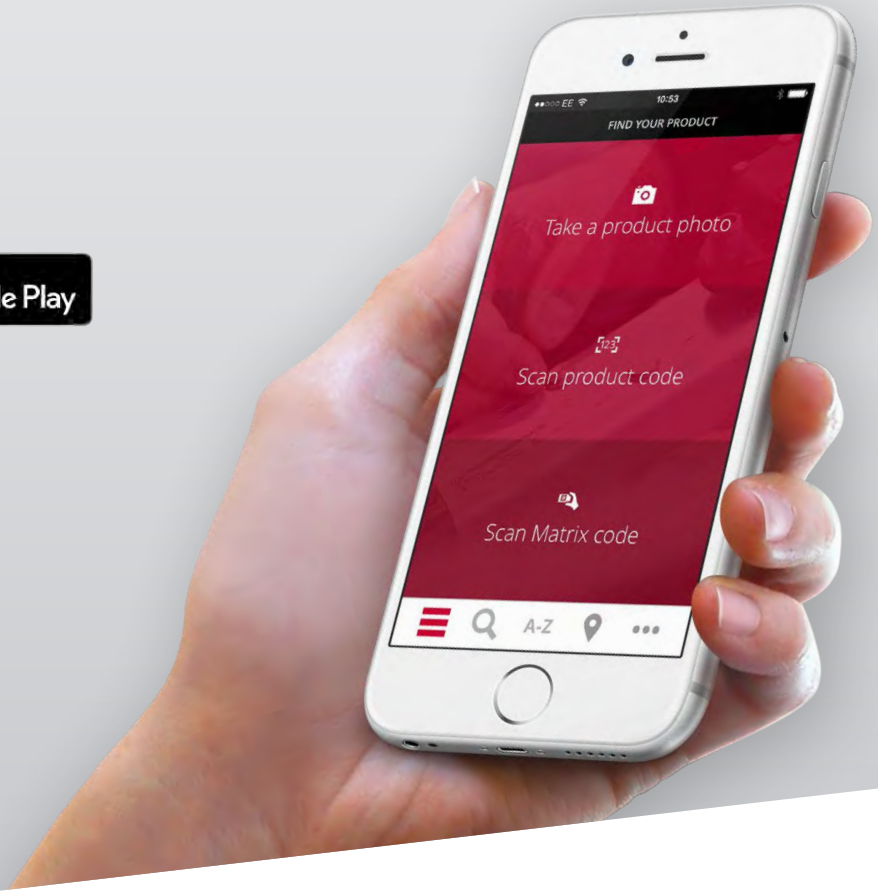

Download on the App Store

GET IT ON Google Play

Find parts faster!

Introducing the new IMI Norgren Express App

ISO 21287 is the most recently-added actuator standard.

These compact cylinders are perfect for high force/short stroke applications where space is at a premium. Not just meeting the standard for compliance, but exceeding it, this range of actuators includes many unique technical variants:

- A powerful product finder in your pocket
- Scan, snap, send and search, quickly and easily
- Convert competitor components to an IMI Norgren equivalent
- Buy online or pinpoint your nearest distributor with stock available

Engineering GREAT Solutions

Try it for yourself, and show your customers how to find parts faster.
Download from the App Store or Google Play today.

IMI NORGREN

IMI Precision Engineering

For further information, visit **www.imi-precision.com** and use the new improved search function. If you cannot see the option you require please contact us.

Air Preparation (FRL)

Going right back to 1927 when Carl Norgren first sketched out the design for the original FRL, IMI Precision Engineering have been at the forefront of air preparation products.

In this section you will find a whole family of air preparation products. Tried and tested Olympian Plus and Excelon ranges, miniature and large capacity units. We list units for general purpose use and more specialised applications - precision regulators, items for safety critical situations, etc.

Use the fast find guide to speed you to the right product to get the job done, pdf datasheets are available online via the webstore or call the team for rapid quotation and delivery.

Modular assembly

Unique plug-in yoke system

Fast Find Guide

Please note: These products represent only part of the IMI Precision Engineering air preparation range. If you can't see the option you require please contact us.

Olympian Plus – Plug-in, Quick Change System

Combination filter/ regulator & lubricator BL64, BL68 G1/2 & G1  Page 143	**General purpose filters F64G, F68G** G1/2 … G 1  Page 144	**High efficiency oil removal filters F64H, F68H** G1/2 … G1  Page 145	**High efficiency oil/oil vapour removal filters F64L** G1/2  Page 146	**Pressure regulators R64G, R68G** G1/2 ... G1  Page 147	**Filter/regulators B64G, B68G** G1/2 ... G1  Page 148
Lubricators L64M, L68M G1/2 ... G1  Page 149	**Soft start/dump valves P64F, P68F** G1/2 ... G1  Page 150	**Pressure relief valves V64H, V68H** G1/2 … G1  Page 151	**Accessories**  Page 152		

Excelon® Plus – Modular System

Combination filter/ regulator & lubricator BL84 G3/8 … G1/2  Page 154	**General purpose filters F84G** G3/8 … G1/2  Page 155	**'Puraire'® high efficiency oil removal filters F84C** G3/8 … G1/2  Page 156	**'Ultraire'® high efficiency oil vapour removal filters F84V** G1/2  Page 157	**Pressure regulators R84G** G3/8 … G1/2  Page 158	**Filter/regulators B84G** G3/8 … G1/2  Page 159
Lubricators L84M G3/8 … G1/2  Page 160	**Shut-off valves T84T** G3/8 … G1/2  Page 161	**Accessories**  Page 162			

Excelon® – Modular System

Combination filter/ regulator & lubricator BL72, BL73, BL74 G1/4 … G1/2  Page 163	**General purpose filters F72G, F73G, F74G** G1/4 … G1/2  Page 164	**High efficiency Oil removal filters F72C, F73C, F74H** G1/4 … G1/2  Page 165	**High efficiency Oil vapour removal filters F72V, F74V** G1/4 … G1/2  Page 166	**Pressure regulators R72G, R73G, R74G** G1/4 … G1/2  Page 167	**Filter/regulators B72G, B73G, B74G** G1/4 … G1/2  Page 168
Lubricators L72M, L73M, L74M G1/4 … G1/2  Page 169	**Soft start/dump valves P72F, P74F** G1/4 … G1/2  Page 170	**Pressure relief valves V72G, V74G** G1/4 … G1/2  Page 171	**Accessories**  Page 172		

Fast Find Guide

Please note: These products represent only part of the IMI Precision Engineering air preparation range. If you can't see the option you require please contact us.

Miniature Series, General Purpose

Filter/regulators and lubricators
P1H
G1/8, G1/4

Page 173

General purpose filter
F07
G1/8, G1/4

Page 174

Puraire® oil removal filter
F39
G1/8, G1/4

Page 175

Pressure regulators
R07
G1/8, G1/4

Page 176

Filter/regulator
B07
G1/8, G1/4

Page 177

Lubricators
L07
G1/8, G1/4

Page 178

Pressure relief valve – diaphragm type V07
G1/8, G1/4

Page 179

Large Capacity Series Units

General purpose filters
F18
G 1 1/2 & 2"

Page 180

Pilot operated regulators
11-808, R18, 11-400
G1/4 … G2

Page 181

Special Purpose

Pre-set regulator
R16
G1/4

Page 183

Precision and instrument regulator
11-818, R27
G1/4

Page 184

Accessories

Gauges

Page 185

Auto drain

Page 185

Drip leg drain

Page 185

Units ready to use

Air preparation
Box Sets

The IMI Norgren 'box set' concept gives you one product, one part number, at one price - a total package. The unit is pre-assembled before despatch and also includes a strong mounting bracket, pressure gauge and an exhausting shut-off valve for isolation of the upstream supply. Choose either a larger Olympian Plus unit, or the smaller Excelon unit, each with their own special features to suit the application.

- Olympian has a unique plug-in yoke system, with ¼ turn release mechanism for units each having a built-in safety feature to prevent incorrect installation and potential unsafe removal, saving time and money with shortest downtime and lowest stocking cost of replacement parts
- Excelon has a modular 'Quikclamp' system allowing units to be quickly and easily removed without disturbing pipework
- Metal bowls on Olympian unit offers greatest protection against contamination and contains an automatic drain valve for safe removal of contaminant (filter only)

Pre-assembled

Engineering GREAT Solutions

Find out more
www.imi-precision.com

IMI NORGREN

OLYMPIAN PLUS PLUG-IN SYSTEM

Combination filter/regulators and lubricator BL64, BL68 – G1/2 & G1

- Shut off valve for safe isolation of supply
- General purpose filter removing condensate and particle contamination
- Regulator ensuring optimum working pressure for economy and safety
- Lubricator to deliver a correct level of oil lubrication into the downstream system optimising life expectancy of other products
- Sturdy bracket for correct mounting
- Pressure gauge for constant monitoring of output pressure

Technical Data

Medium:
Compressed air only

Maximum inlet pressure:
17 bar

Ambient temperature:
-20°C … +80°C
Air supply must be dry enough to avoid ice formation at temperatures below +2°C

Pressure range:
BL64: 0,3 … 10 bar
BL68: 0,4 … 8 bar
Note: Outlet pressure can be adjusted in excess of and also less than those listed

Gauge ports:
Rc1/8

BL64

BL68

Dimensions

BL64

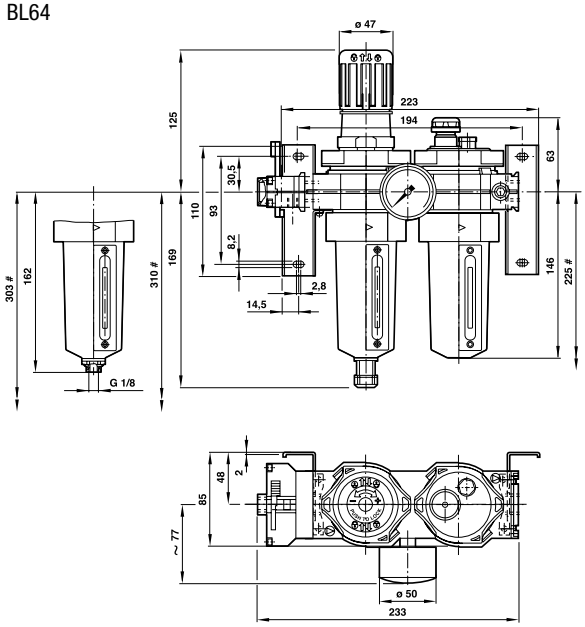

BL68

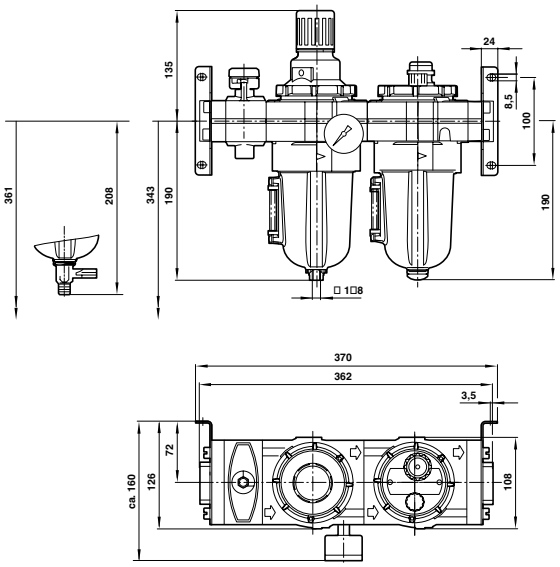

Minimum clearance required to remove bowl

Models

Boxed sets BL64 and BL68 with shut-off valve		
Auto drain Model	**Manual drain Model**	**Port size**
BL64-401	BL64-421	G1/2
BL68-801	BL68-821	G1

Accessories

Tamper resistant kit
4355-51
4355-51

Service Kit

Service kits	
Auto drain	**Manual drain**
B64G-KITA40R & L64M-KIT	B64G-KITM40R & L64M0KIT
B68G-KITA40R & L68M-KIT	B68G-KITM40R & L68M-KIT

OLYMPIAN PLUS PLUG-IN SYSTEM

General purpose filters F64G, F68G – G1/2 … G1

- Effective liquid removal and positive solid filtration
- Large filter element area for minimum pressure drop

Technical Data

Medium:
Compressed air only

Maximum inlet pressure:
17 bar

Ambient temperature:
-20°C … +80°C
Air supply must be dry enough to avoid ice formation at temperatures below +2°C

F64G

F68G

Dimensions

F64G

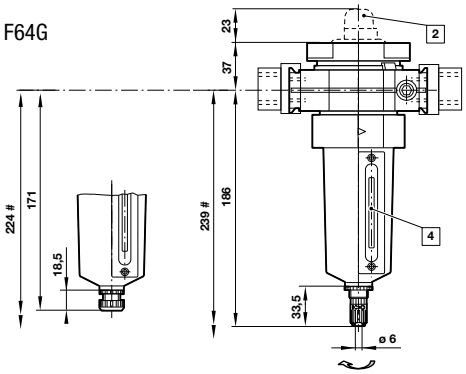

Manual drain Auto drain

F68G

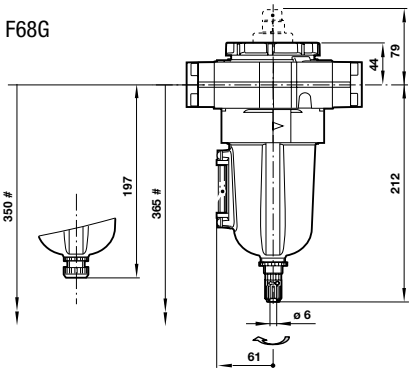

Manual drain Auto drain

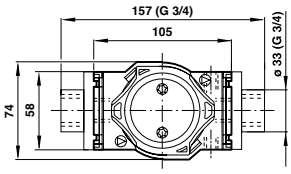

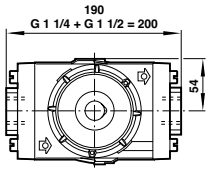

Minimum clearance required to remove bowl
2 Service indicator optional
4 Sight glass

Models / Accessories / Service Kit

F64G series Auto drain Model	Manual drain Model	Port size	Flow* (dm³/s)	Element (µm)	Wall mounting bracket	3/2 Shut-off valve**	Silencer (shut-off valve)	Auto drain	Manual drain
									
F64G-4GN-AD3	F64G-4GN-MD3	G1/2	75	40	74504-50	T64T-4GB-P1N	T40B1800	F64G-KITA40	F64G-KITM40
F64G-6GN-AD3	F64G-6GN-MD3	G3/4	75	40	74504-50	T64T-6GB-P1N	T40B1800	F64G-KITA40	F64G-KITM40
F64G-NNN-AD3	F64G-NNN-MD3	without	75	40	–	–	–	F64G-KITA40	F64G-KITM40

F68G series Auto drain Model	Manual drain Model	Port size	Flow* (dm³/s)	Element (µm)	Wall mounting bracket	3/2 Shut-off valve**	Silencer (shut-off valve)	Auto drain	Manual drain
									
F68G-8GN-AR3	F68G-8GN-MR3	G1	190	40	18-001-979	T68H-8GB-B2N	T40B2800	F68G-KITA40	F68G-KITM40
F68G-NNN-AR3	F68G-NNN-MR3	without	190	40	–	–	–	F68G-KITA40	F68G-KITM40

* Typical flow with 6,3 bar inlet pressure and 0,5 bar pressure drop.
** Threaded exhaust port.

For other styles of mounting bracket and accessories, please refer to page 152.

OLYMPIAN PLUS PLUG-IN SYSTEM

'Puraire'® high efficiency oil removal filters F64H, F68H – G1/2 … G1

- High efficiency coalescing filters
- Coalescing element removes sub-micron particles and converts oil and water mist to liquid form to drain away
- Service indicator standard

Technical Data

Medium:
Compressed air only

Maximum inlet pressure:
17 bar

Remaining oil content:
0,01 mg/m³ max at 21°C

Particle removal:
To 0,01 µm

Ambient temperature:
-20°C … +65°C
Air supply must be dry enough to avoid ice formation at temperatures below +2°C

F64H

F68H

Dimensions

F64H Auto drain

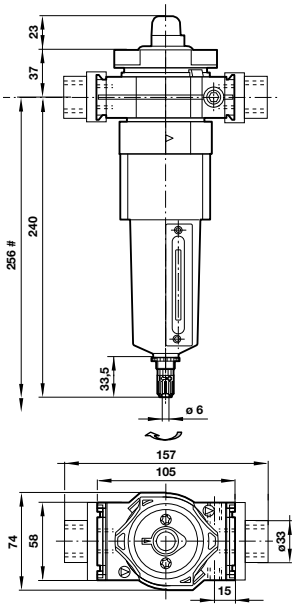

F68H Auto drain

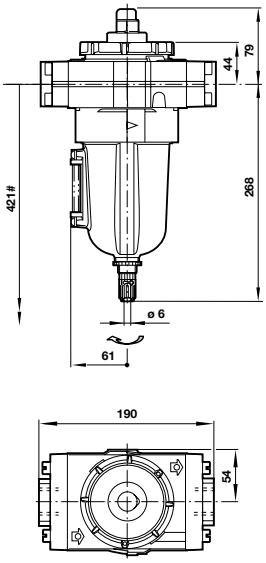

Minimum clearance required to remove bowl

Typical performance characteristics

Inlet pressure (bar)	Maximum flow dm³/s*	
	F64H	F68H
1	11,2	24
3	19,3	41
5	24,9	53
6,3	28,0	60
7	29,5	63
9	33,5	72

* Maximum flow to maintain stated oil removal performance.

Models

F64H series Auto drain Model	Port size	Flow* (dm³/s)	Wall mounting bracket	3/2 Shut-off valve**	Silencer (shut-off valve)	Auto drain
						
F64H-4GD-AD0	G1/2	28	74504-50	T64T-4GB-P1N	T40B1800	F64H-KITA0C
F64H-NND-AD0	without	28	–	–	–	F64H-KITA0C

F68H series Auto drain Model	Port size	Flow* (dm³/s)	Wall mounting bracket	3/2 Shut-off valve**	Silencer (shut-off valve)	Auto drain
						
F68H-8GD-AU0	G1	60	18-001-979	T68H-8GB-B2N	T40B2800	F68H-KITA0C
F68H-NND-AU0	without	60	–	–	–	F68H-KITA0C

* To maintain stated oil content at 6,3 inlet pressure. ** Threaded exhaust port.

For other styles of mounting bracket and accessories, please refer to page 152.

OLYMPIAN PLUS PLUG-IN SYSTEM

'Ultraire'® high efficiency oil/oil vapour removal filters F64L – G1/2

- F64L is a 'dual function' products incorporating an oil removal element (bottom) and an oil vapour removal element (top)
- Ultra high efficiency coalescing filters with active carbon pack
- Carbon pack assists in the removal of hydro-carbon gases and odours
- High Intensity blue colour change indication when contaminated
- Carbon pack service life 1000 hours at 21°C

Technical Data

Medium:
Compressed air only

Maximum inlet pressure:
17 bar

Remaining oil content:
0,003 mg/m³ at 21°C

Particle removal:
To 0,01 µm

Ambient temperature:
-20°C … +65°C
Air supply must be dry enough to avoid ice formation at temperatures below +2°C

F64L

Dimensions

F64L Auto drain

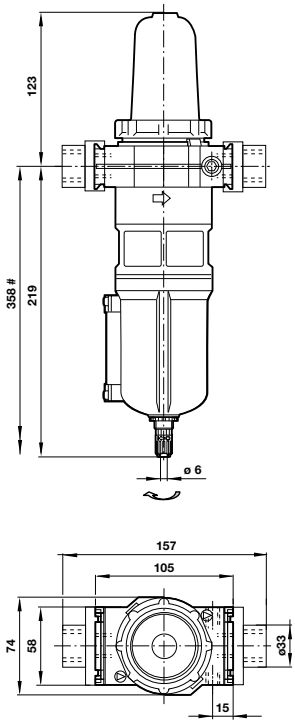

Minimum clearance required to remove bowl

Typical performance characteristics

Inlet pressure (bar)	Maximum flow dm³/s* F64L
1	4,4
3	7,6
5	9,8
6,3	11,0
7	11,5
9	13,2

* Maximum flow to maintain stated oil removal performance.

Models / Accessories / Service Kit

F64L series Auto drain Model	Port size	Flow* (dm³/s)	Wall mounting bracket	3/2 Shut-off valve**	Silencer (shut-off valve)	Auto drain
						
F64L-4GN-AR0	G1/2	11	74504-50	T64T-4GB-P1N	T40B1800	F64L-KITA0V
F64L-NNN-AR0	without	11	–	–	–	F64L-KITA0V

* To maintain stated oil at 6,3 bar inlet pressure.
** Threaded exhaust port.

For other styles of mounting bracket and accessories, please refer to page 152.

OLYMPIAN PLUS PLUG-IN SYSTEM

Pressure regulators R64G, R68G – G1/2 ... G1

- Diaphragm and balanced valve design ensure good regulation characteristics
- Non-rising adjusting knob has snap-action lock

Technical Data

Medium:
Compressed air only

Maximum inlet pressure:
R64G: 17 bar
R68G: 20 bar

Gauge ports:
Rc1/8

Ambient temperature:
-20°C … +80°C
Air supply must be dry enough to avoid ice formation at temperatures below +2°C

Pressure range:
R64G: 0,3 … 10 bar (Knob)
R68G: 0,4 … 8 bar (Knob)
Note: Outlet pressure can be adjusted in excess of and also less than those listed

R64G

R68G

Dimensions

R64G

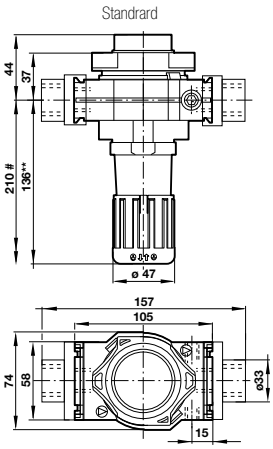

R68G

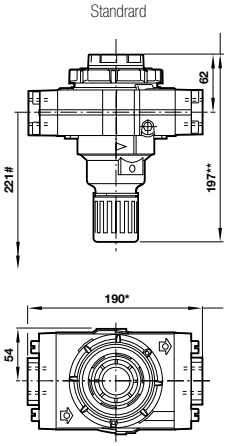

Minimum clearance required to remove unit from yoke
* For 1 1/4 and 1 1/2 ported yokes add 10 mm
** Reduces by 4 mm with knob in locked position

Models / Accessories / Service Kit

R64G series Model	Port size	Pressure range (bar)	Flow* (dm³/s)	Wall mounting bracket	Gauge	3/2 Shut-off valve**	Silencer (shut-off valve)	Tamper resistant kit	
									
R64G-4GK-RMN	G1/2	0,3 … 10	120	74504-50	18-013-013 (0 … 10 bar)	T64T-4GB-P1N	T40B1800	4355-51	R64G-KITR
R64G-6GK-RMN	G3/4	0,3 … 10	120	74504-50	18-013-013 (0 … 10 bar)	T64T-6GB-P1N	T40B1800	4355-51	R64G-KITR
R64G-NNK-RMN	without	0,3 … 10	120	–	18-013-013 (0 … 10 bar)	–	–	4355-51	R64G-KITR

R68G series Model	Port size	Pressure range (bar)	Flow* (dm³/s)	Wall mounting bracket	Gauge	3/2 Shut-off valve**	Silencer (shut-off valve)	Tamper resistant kit	
									
R68G-8GK-RLN	G1	0,4 … 8	170	18-001-979	18-013-013 (0 … 10 bar)	T68H-8GB-B2N	T40B2800	4355-51	R68G-KITR
R68G-NNK-RLN	without	0,4 … 8	170	–	18-013-013 (0 … 10 bar)	–	–	4355-51	R68G-KITR

* Typical flow with 10 bar inlet pressure and 1 bar droop from set pressure of 6,3 bar.
** Threaded exhaust port.

For other styles of mounting bracket and accessories, please refer to page 152.

OLYMPIAN PLUS PLUG-IN SYSTEM

Filter/regulators B64G, B68G – G1/2 ... G1

- High efficiency water removal
- Good regulation characteristics
- Non-rising adjusting knob has snap-action lock

Technical Data

Medium:
Compressed air only

Maximum inlet pressure:
17 bar

Gauge ports:
Rc1/8

Ambient temperature:
-20°C … +80°C
Air supply must be dry enough to avoid ice formation at temperatures below +2°C

Pressure range:
B64G: 0,3 … 10 bar (Knob)
B68G: 0,4 … 8 bar (Knob)
Note: Outlet pressure can be adjusted in excess of and also less than those listed

B64G

B68G

Dimensions

B64G

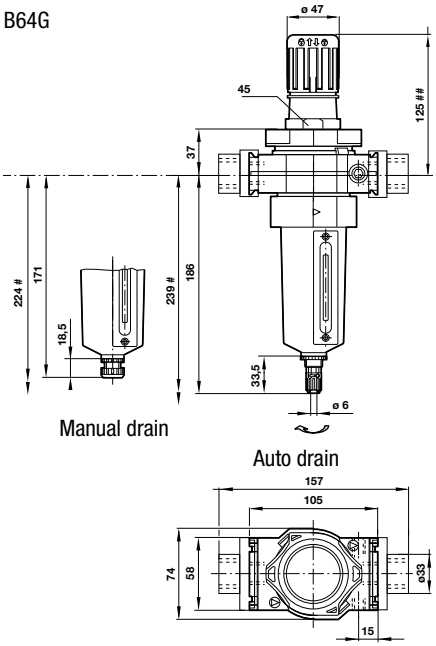

B68G

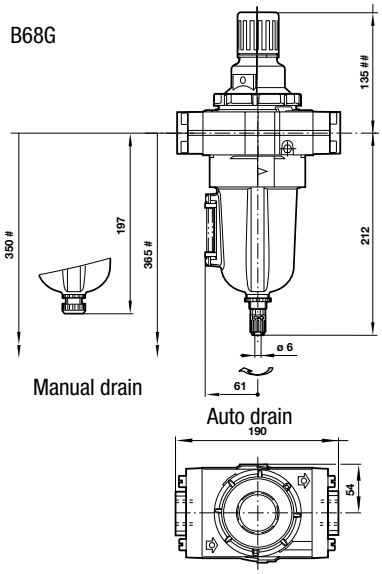

Minimum clearance required to remove bowl
Reduces by 4 mm with knob in locked position

Models

B64G series Auto drain Model	Manual drain Model	Port size	Pressure range (bar)	Flow* (dm^3/s)	Element (µm)
					
B64G-4GK-AD3-RMN	B64G-4GK-MD3-RMN	G1/2	0,3 … 10	106	40
B64G-6GK-AD3-RMN	B64G-6GK-MD3-RMN	G3/4	0,3 … 10	106	40
B64G-NNK-AD3-RMN	B64G-NNK-MD3-RMN	without	0,3 … 10	106	40

Accessories

Wall mounting bracket	Gauge**	3/2 Shut-off valve***	Silencer (shut-off valve)	Tamper resistant kit
				
74504-50	18-013-013	T64T-4GB-P1N	T40B1800	4355-51
74504-50	18-013-013	T64T-6GB-P1N	T40B1800	4355-51
–	18-013-013	–	–	4355-51

Service Kit

Auto drain	Manual drain
	
B64G-KITA40R	B64G-KITM40R
B64G-KITA40R	B64G-KITM40R
B64G-KITA40R	B64G-KITM40R

B68G series Auto drain Model	Manual drain Model	Port size	Pressure range (bar)	Flow* (dm^3/s)	Element (µm)
					
B68G-8GK-AR3-RLN	B68G-8GK-MR3-RLN	G1	0,4 … 8	240	40
B68G-NNK-AR3-RLN	B68G-NNK-MR3-RLN	without	0,4 … 8	240	40

Wall mounting bracket	Gauge**	3/2 Shut-off valve***	Silencer (shut-off valve)	Tamper resistant kit
				
18-001-979	18-013-013	T68H-8GB-B2N	T40B2800	4355-51
–	18-013-013	–	–	4355-51

Auto drain	Manual drain
	
B68G-KITA40R	B68G-KITM40R
B68G-KITA40R	B68G-KITM40R

* Typical flow with 10 bar inlet pressure and 1 bar droop from set pressure of 6,3 bar.
** Pressure range: 18-013-013 = 0 … 10 bar.
*** Threaded exhaust port.

For other styles of mounting bracket and accessories, please refer to page 152.

OLYMPIAN PLUS PLUG-IN SYSTEM

Lubricators L64M, L68M – G1/2 ... G1

- Micro-fog plug-in lubricators for best lubrication in general purpose pneumatic applications

Technical Data

Medium:
Compressed air only

Maximum inlet pressure:
17 bar

Start point:
L64M: 1,5 dm³/s
L68M: 6 dm³/s

Bowl Capacity:
L64M: 0,2 l
L68M: 0,5 l

Ambient temperature:
-20°C … +80°C
Air supply must be dry enough to avoid ice formation at temperatures below +2°C

L64M

Dimensions

L64M

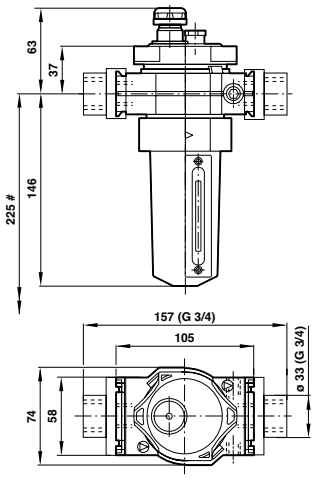

L68M

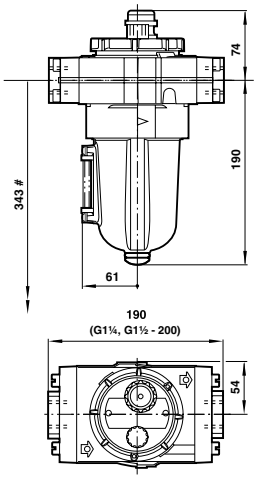

Minimum clearance required to remove bowl

PRODUCT PLUS

Have you thought about...

Whilst non lubricated systems are best from an environmental point of view, the operating life of virtually all products can be extended up to 400% by using a correctly sized and adjusted lubricator

L68M

Models / Accessories / Service Kit

L64M series Model	Type	Port size	Flow* (dm³/s)	Wall mounting bracket	3/2 Shut-off valve**	Silencer (shut-off valve)	
							
L64M-4GP-EDN	Micro-fog	G1/2	72	74504-50	T64T-4GB-P1N	T40B1800	L64M-KIT
L64M-6GP-EDN	Micro-fog	G3/4	72	74504-50	T64T-6GB-P1N	T40B1800	L64M-KIT
L64M-NNP-EDN	Micro-fog	without	72	–	–	–	L64M-KIT

L68M series Model	Type	Port size	Flow* (dm³/s)	Wall mounting bracket	3/2 Shut-off valve**	Silencer (shut-off valve)	
							
L68M-8GP-ERN	Micro-fog	G1	175	18-001-979	T68H-8GB-B2N	T40B2800	L68M-KIT
L68M-NNP-ERN	Micro-fog	without	175	–	–	–	L68M-KIT

* Typical flow with 6,3 bar inlet pressure and 0,5 bar pressure drop.
** Threaded exhaust port.

For other styles of mounting bracket and accessories, please refer to page 152.

OLYMPIAN PLUS PLUG-IN SYSTEM

Soft start dump valve P64F & P68F – G1/2 ... G1

- Assists machine designers in complying with the European Machineries Directive
- Can help existing machinery to comply with PUWER (Provision and Use of Work Equipment Regulations)
- Controlled increase of downstream pressure on start up
- Solenoid, air pilot or manual operator
- High forward flow capacity
- High flow dump facility

Technical Data

Medium:
Compressed air only

Maximum operating pressure:
For solenoid operated versions: 10 bar
For pilot operated versions: 17 bar

Minimum operating pressure:
3 bar

Ambient temperature:
-20°C … +80°C
(solenoid version up to +50°C)
Air supply must be dry enough to avoid ice formation at temperatures below +2°C

Air pilot port:
P64F: Rc1/4 P68F: G1/4

Exhaust port:
P64F: G1/2 P68F: G1

Maximum flow:
P64F: 57 dm³/s P68F: 147 dm³/s
Note: Maximum flow with 6,3 bar inlet pressure and pressure drop of 0,5 bar

Snap pressure:
Full flow when downstream pressure reaches 50-80% of inlet pressure

P64F

P68F

Dimensions

P64F
Solenoid

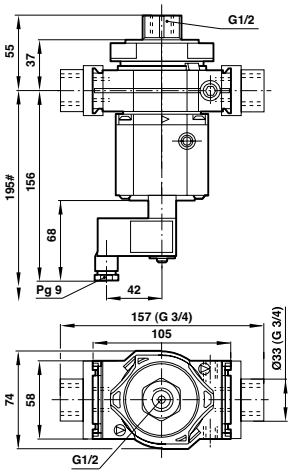

P64F
Air Pilot

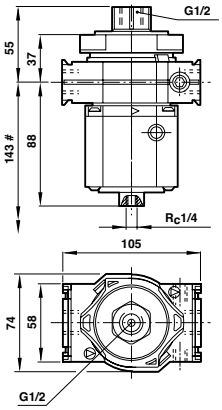

P68F

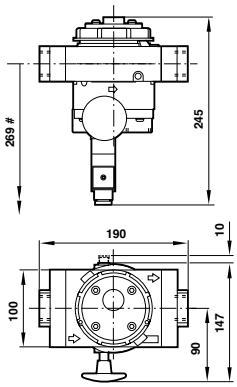

Minimum clearance required to remove unit

Models

Accessories

P64F & P68F series – 24V d.c. Solenoid pilot operated Model	Air pilot operated Model	Port size	Wall mounting bracket	Silencer (dump valve)	3/2 Shut-off valve*	Silencer (shut-off valve)	Basic solenoid plug
							
P64F-4GC-PFN	P64F-4GA-NNN	G1/2	74504-50	MB004B	T64T-4GB-P1N	T40B1800	0657868000000000
P64F-NNC-PFN	P64F-NNA-NNN	Without	–	MB004B	–	–	0657868000000000
P68F-8GC-PFN	P68F-8GB-NNN	G1	18-001-979	MB008B	T68H-8GB-B2N	T40B2800	0657868000000000
P68F-NGC-PFN	P68F-NGB-NNN	Without	–	MB008B	–	–	0657868000000000

* Threaded exhaust port.

For other styles of mounting bracket and accessories, please refer to page 152.

OLYMPIAN PLUS PLUG-IN SYSTEM

Pressure relief valves V64H, V68H – G1/2 … G1

- Olympian relief valves protect compressed air systems from over-pressurisation
- High relief capacity, sensitive and accurate
- Threaded relief port for silencer or piped exhaust

IMI Precision Engineering pressure relief valves comply with category O(S.E.P.) and category 1 of the Pressure Equipment Directive 97/23/EC.

Technical Data

Medium:
Compressed air only

Gauge ports:
Rc1/8

Relief port:
V64H: G1/2
V68H: G1

Ambient temperature:
-20°C … +80°C
Air supply must be dry enough to avoid ice formation at temperatures below +2°C

Relief pressure adjustment range:
V64H - … - RMN: 1 … 10 bar
V68H - … - RMN: 0,3 … 10 bar

V64H

V68H

Dimensions

V64H

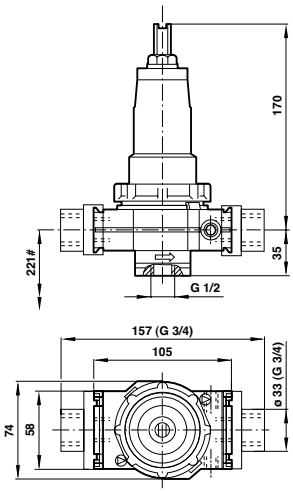

V68H

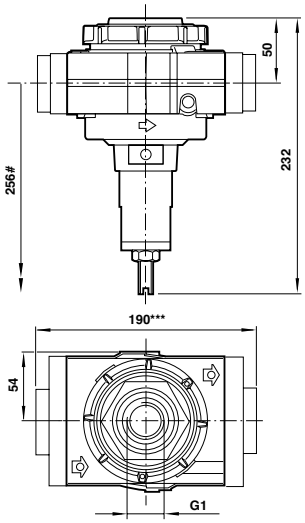

*** For 1 1/4 and 1 1/2 ported yokes add 10 mm
# Minimum clearance required to remove unit from yoke

Models

Accessories

Service Kit

V64H series Model	Port size	Pressure range (bar)	Wall mounting bracket	Gauge	Silencer (relief valve)	3/2 Shut-off valve**	Silencer (shut-off valve)	Tamper resistant kit	
									
V64H-4GD-RMN	G1/2	1 … 10	74504-50	18-013-013 (0 … 10 bar)	MB004B	T64T-4GB-P1N	T40B1800	1581-90	V64H-KIT
V64H-NND-RMN	Without	1 … 10	–	18-013-013 (0 … 10 bar)	MB004B	–	–	1581-90	V64H-KIT

V68H series Model	Port size	Pressure range (bar)	Wall mounting bracket	Gauge	Silencer (relief valve)	3/2 Shut-off valve**	Silencer (shut-off valve)	Tamper resistant kit	
									
V68H-8GD-RMN	G1	0,3 … 10	18-001-979	18-013-013 (0 … 10 bar)	MB008B	T68H-8GB-B2N	T40B2800	1581-90	V68H-KIT
V68H-NND-RMN	Without	0,3 … 10	–	18-013-013 (0 … 10 bar)	MB008B	–	–	1581-90	V68H-KIT

** Threaded exhaust port.

For other styles of mounting bracket and accessories, please refer next page.

OLYMPIAN PLUS PLUG-IN SYSTEM

Accessories

YOKES

- When installed, enables Olympian basic units to be 'plugged in' or removed without disturbing connecting pipework

Models

Single Unit Model	Double Unit Model	Series	Port size
Y64A-2GA-N1N	Y64A-2GA-N2N	64	G1/4
Y64A-3GA-N1N	Y64A-3GA-N2N	64	G3/8
Y64A-4GA-N1N	Y64A-4GA-N2N	64	G1/2
Y64A-6GA-N1N	Y64A-6GA-N2N	64	G3/4
Y68A-6GN-N1N	Y68A-6GN-N2N	68	G3/4
Y68A-8GN-N1N	Y68A-8GN-N2N	68	G1
Y68A-AGN-N1N	Y68A-AGN-N2N	68	G1 1/4
Y68A-BGN-N1N	Y68A-BGN-N2N	68	G1 1/2
74785-98*	–	68	without

Yokes may be installed in a pipe system in advance of the selection or fitment of the basic units.

* For use with porting blocks & end connector kits.

YOKE CONNECTOR KIT

- Allows quick and easy connection of one Olympian Plus product/accessory to another

Models

Model	Series
74503-51	64
18-026-987	68

END CONNECTOR

- Provides a threaded end to an assembly

Models

Model	Series	Port size
74505-50	64	G1/2
74505-53	64	G3/4
5524-55	68	G3/4
5524-52	68	G1
5523-52	68	G1 1/4
5523-93	68	G1 1/2

For use with end mounted porting block or for G1/2 or G3/4 over porting.

SHUT-OFF VALVE

- 3 port/2 position
- Easy to operate
- Lockable in the 'closed' position

Models

Model	Series	Port size
T64T-2GB-P1N	64	G1/4
T64T-3GB-P1N	64	G3/8
T64T-4GB-P1N	64	G1/2
T64T-6GB-P1N	64	G3/4
T68H-6GB-B2N	68	G3/4
T68H-8GB-B2N	68	G1
T68H-AGB-B2N	68	G1 1/4
T68H-BGB-B2N	68	G1 1/2

Lockout facility. G1/8 exhaust port on 64 series, use silencer, ref. T40B1800.

PORTING BLOCKS

- Provides 3 auxiliary air outlets
- Can be installed in a combination to branch off to smaller sub-systems

Models

Model	Series
74507-50	64

2 G1/4 outlets. 1 G3/8 outlet.

Model	Series	Top port	Side port
18-026-986	68	G1/2	G1/4

Porting blocks may be used as spacers, gauge ports or as auxiliary air outlets. They may be fitted to end connectors, rear entry manifolds, shut-off valves and rear entry shut-off valves.

Use the correct length screws (supplied) when fitting porting blocks.

EXCELON® PLUS MODULAR SYSTEM

Combination filter/regulators and lubricators BL84 – G3/8 … G1/2

- Tamper proof shut off valve for safe isolation of supply
- General purpose filter removing condensate and particle contamination
- Tamper proof Regulator ensuring optimum working pressure for economy and safety
- Lubricator to deliver a correct level of oil lubrication into the downstream system optimising life expectancy of other products
- Sturdy bracket for correct mounting
- Pressure gauge for constant monitoring of output pressure

Technical Data

Medium:
Compressed air only

Maximum inlet pressure:
10 bar

Ambient temperature:
-20°C … +60°C
Air supply must be dry enough to avoid ice formation at temperatures below +2°C

Pressure range:
0,3 … 10 bar
Note: Outlet pressure can be adjusted in excess of and also less than those listed

Available from Summer 2017

BL84

Dimensions

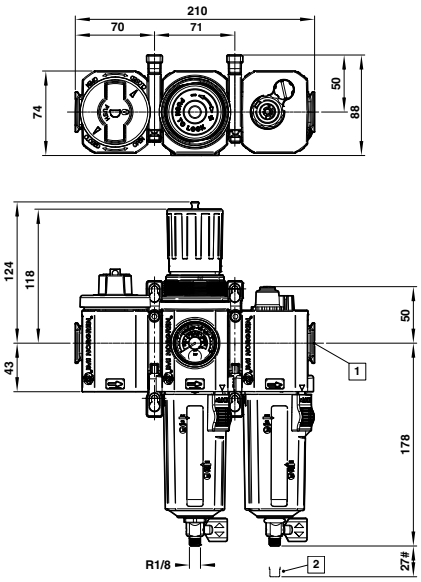

Minimum clearance required to remove bowl

Models

Accessories

Service Kit

Boxed sets with shut-off valve						Integral Gauge (0 … 10 bar)	Element Kit
Auto drain Model	Manual drain Model	Port size	Element (µm)	Type	Bowl		
							
BL84-301G	BL84-321G	G3/8	40	Micro Fog	GT*	840073-01KIT	840038-51KIT
BL84-401G	BL84-421G	G1/2	40	Micro Fog	GT*	840073-01KIT	840038-51KIT

*GT= Guarded transparent bowl.

EXCELON® PLUS MODULAR SYSTEM

General purpose filters F84G – G3/8 … G1/2

- Excelon® Plus design allows in-line installation or modular installation with other Excelon® Plus products
- Double Safety lock on bowl
- New Filter Maintenance system

Technical Data

Medium:
Compressed air only

Maximum inlet pressure:
10 bar

Ambient temperature:
-20°C … +60°C
Air supply must be dry enough to avoid ice formation at temperatures below +2°C

Available from Summer 2017

F84G

Dimensions

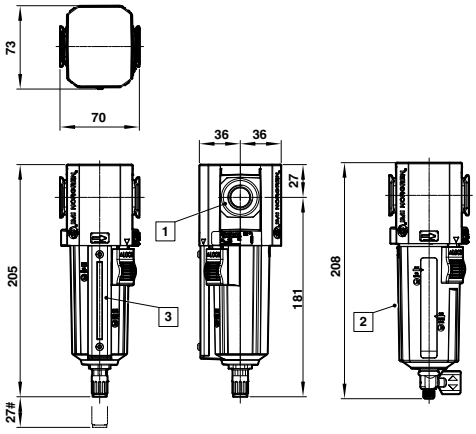

Minimum clearance required to remove bowl

Models / Accessories / Service Kit

F84G series Auto drain Model	Manual drain Model	Port size	Flow* (dm³/s)	Element (µm)	Bowl	Wall mounting bracket	Quikclamp	Quikclamp with bracket	Element
									
F84G-3GN-AP3	F84G-3GN-QP3	G3/8	66	40	GT**	840024-50KIT	840014-51KIT	840014-52KIT	840038-51KIT
F84G-4GN-AP3	F84G-4GN-QP3	G1/2	83	40	GT**	840024-50KIT	840014-51KIT	840014-52KIT	840038-51KIT

**GT= Guarded transparent bowl.
* Typical flow with 6,3 bar inlet pressure and 0,5 bar pressure drop.

For other styles of mounting bracket and accessories, please refer to page 162.
NOTE: End connectors required for use with quikclamps if directly mounting to pipework / fittings – contact us for further details.

EXCELON® PLUS MODULAR SYSTEM

'Puraire'® high efficiency oil removal filters F84C – G3/8 … G1/2

- Excelon® Plus design allows in-line installation or modular installation with other Excelon® Plus products
- High efficiency oil and particle removal
- Double Safety lock on bowl
- Service indicator standard

Technical Data

Medium:
Compressed air only

Maximum inlet pressure:
10 bar

Remaining oil content:
0,01 mg/m³ at +21°C

Particle removal:
To 0,01 µm

Ambient temperature:
-20°C … +60°C
Air supply must be dry enough to avoid ice formation at temperatures below +2°C

Available from Summer 2017

F84C

Dimensions

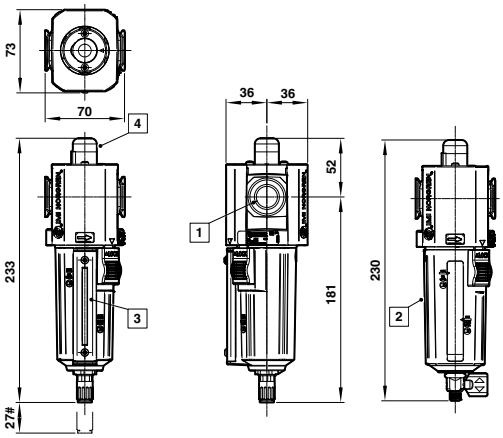

Minimum clearance required to remove bowl

Typical performance characteristics

Inlet pressure (bar)	Maximum flow (dm³/s)* F84C
1	11,2
3	19,3
5	24,9
6,3	28,0
7	29,5
9	33,5

* Maximum flow to maintain stated oil removal performance.

Models / Accessories / Service Kit

F84C series Model	Port size	Flow* (dm³/s)	Bowl	Wall mounting bracket	Quikclamp	Quikclamp with bracket	Element Kit
							
F84C-3GD-AP0	G3/8	16	GT**	840024-50KIT	840014-51KIT	840014-52KIT	840044-50KIT
F84C-4GD-AP0	G1/2	28	GT**	840024-50KIT	840014-51KIT	840014-52KIT	840044-50KIT

**GT= Guarded transparent bowl.
* To maintain stated oil content at 6,3 bar inlet pressure.

For other styles of mounting bracket and accessories, please refer to page 162.
NOTE: End connectors required for use with quikclamps if directly mounting to pipework / fittings – contact us for further details.

EXCELON® PLUS MODULAR SYSTEM

'Ultraire'® high efficiency oil vapour removal filters F84V – G1/2

- Excelon® Plus design allows inline or modular installation with other Excelon® Plus products
- Adsorbing type activated carbon element removes oil vapours and most hydrocarbon odours
- Double Safety lock on bowl
- Carbon pack service life 1000 hours at 21ºC

Technical Data

Medium:
Compressed air only

Maximum inlet pressure:
10 bar

Remaining oil content:
0,003 mg/m^3 max. at +21°C

Ambient temperature:
Transparent bowl:
-20°C … +60°C
Air supply must be dry enough to avoid ice formation at temperatures below +2°C

Available from Summer 2017

F84V

Dimensions

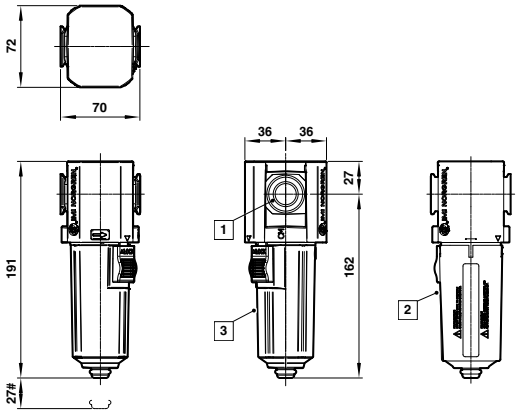

Minimum clearance required to remove bowl

Oil vapour removal filters must be protected upstream by an oil removal filter. A typical assembly:

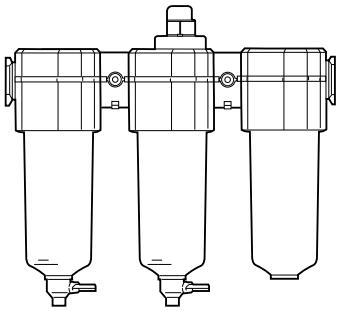

General purpose filter | Oil removal filter | Oil vapour removal filter

Typical performance characteristics

Inlet pressure (bar)	Maximum flow (dm^3/s)* F84V
2,5	8,7
4	10,7
6,3	13,3
8	15,6
10	17,6

* Maximum flow to maintain stated oil removal performance.

Models / Accessories / Service Kit

F84V series Model	Port size	Flow* (dm^3/s)	Bowl	Wall mounting bracket	Quikclamp	Quikclamp with bracket	Element Kit
							
F84V-4GN-EPA	G1/2	13	GT**	840024-50KIT	840014-51KIT	840014-52KIT	840041-50KIT

**GT= Guarded transparent bowl.
* To maintain stated oil content at 6,3 bar inlet pressure.

For other styles of mounting bracket and accessories, please refer to page 162.
NOTE: End connectors required for use with quikclamps if directly mounting to pipework / fittings – contact us for further details.

EXCELON® PLUS MODULAR SYSTEM

Pressure regulators R84G – G3/8 … G1/2

- Excelon® Plus design allows in-line or modular installation
- Balanced valve design for optimum pressure control
- Standard relieving models allow reduction of downstream pressure when the system is dead-ended
- Push to lock adjusting knob with tamper proof as standard
- Integrated Gauge

Technical Data

Medium:
Compressed air only

Maximum inlet pressure:
10 bar

Ambient temperature:
-20°C … +60°C
Air supply must be dry enough to avoid ice formation at temperatures below +2°C

Pressure range:
0,3 … 10 bar
Note: Outlet pressure can be adjusted in excess of and also less than those listed

Available from Summer 2017

R84G

Dimensions

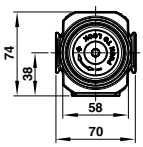

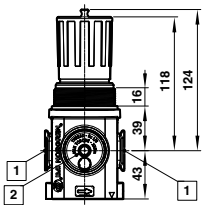

Models

Accessories

R84G series Model	Port size	Pressure range (bar)	Flow* (dm^3/s)	Panel mounting ring	Neck Mounting bracket (Including Panel mounting ring)	Quikclamp	Quikclamp with bracket	Integral Gauge (0 … 10 bar)
								
R84G-3GK-RMG	G3/8	0,3 … 10	98	840048-89KIT	840068-51KIT	840014-51KIT	840014-52KIT	840073-01KIT
R84G-4GK-RMG	G1/2	0,3 … 10	105	840048-89KIT	840068-51KIT	840014-51KIT	840014-52KIT	840073-01KIT

* Typical flow with 10 bar inlet pressure and 1 bar droop from set pressure of 6,3 bar.

For other styles of mounting bracket and accessories, please refer to page 162.

NOTE: End connectors required for use with quikclamps if directly mounting to pipework / fittings – contact us for further details.

EXCELON® PLUS MODULAR SYSTEM

Filter/regulators B84G – G3/8 … G1/2

- Excelon® Plus design allows in-line installation or modular installation with other Excelon® Plus products
- High efficiency water and particle removal
- Double Safety lock on bowl
- Push to lock adjusting knob with tamper proof as standard
- Integrated Gauge

Technical Data

Medium:
Compressed air only

Maximum inlet pressure:
10 bar

Pressure range:
0,3 … 10 bar

Ambient temperature:
-20°C … +60°C
Air supply must be dry enough to avoid ice formation at temperatures below +2°C

Available from Summer 2017

B84G

Dimensions

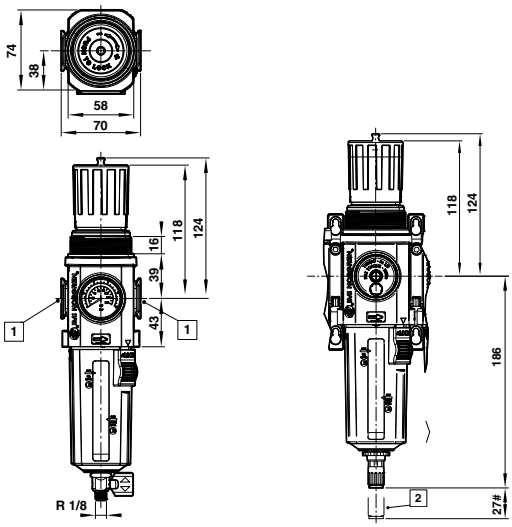

Minimum clearance required to remove bowl

Models / Accessories / Service Kit

B84G series Auto drain Model	Manual drain Model	Port size	Pressure range (bar)	Flow* (dm^3/s)	Element (µm)	Bowl	Panel mounting ring	Neck Mounting bracket (Including Panel mounting ring)	Quikclamp	Quikclamp with bracket	Integral Gauge (0 … 10 bar)	Element Kit
												
B84G-3GK-AP3-RMG	B84G-3GK-QP3-RMG	G3/8	0,3 … 10	77	40	GT**	840048-89KIT	840068-51KIT	840014-51KIT	840014-52KIT	840073-01KIT	840038-51KIT
B84G-4GK-AP3-RMG	B84G-4GK-QP3-RMG	G1/2	0,3 … 10	100	40	GT**	840048-89KIT	840068-51KIT	840014-51KIT	840014-52KIT	840073-01KIT	840038-51KIT

**GT = Guarded transparent bowl.
* Typical flow with 10 bar inlet pressure and 1 bar droop from set pressure of 6,3 bar.
For other styles of mounting bracket and accessories, please refer to page 162.

NOTE: End connectors required for use with quikclamps if directly mounting to pipework / fittings – contact us for further details.

EXCELON® PLUS MODULAR SYSTEM

Lubricators L84M – G3/8 … G1/2

- Excelon® Plus design allows in-line or modular installation
- Flow sensor provides a constant density of oil delivery over a wide range of flows
- All round (360°) visibility of sight-feed dome for ease of drip rate setting
- Micro-fog lubricators for best lubrication in general purpose pneumatic applications
- Double Safety lock on bowl

Technical Data

Medium:
Compressed air only

Maximum inlet pressure:
10 bar

Start point:
0,94 dm^3/s
Minimum flow required for lubricator operation at 6,3 bar inlet pressure

Ambient temperature:
-20°C … +60°C
Air supply must be dry enough to avoid ice formation at temperatures below +2°C

Available from Summer 2017

L84M

Dimensions

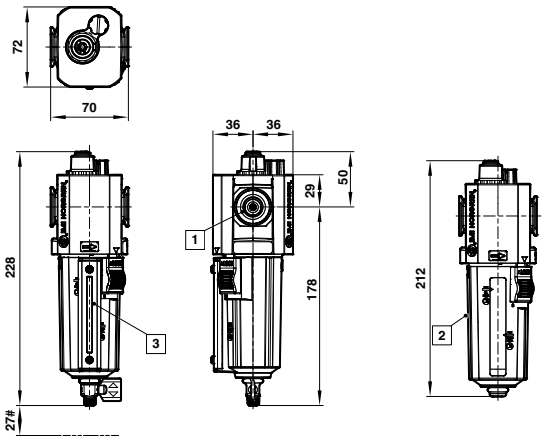

Minimum clearance required to remove bowl

Models

L84M series Model	Type	Port size	Flow* (dm^3/s)	Bowl	Wall mounting bracket	Quikclamp	Quikclamp with bracket
							
L84M-3GP-EPN	Micro fog	G3/8	50	GT**	840024-50KIT	840014-51K	840014-52KIT
L84M-4GP-EPN	Micro fog	G1/2	73	GT**	840024-50KIT	840014-51K	840014-52KIT

**GT= Guarded transparent bowl.
* Typical flow with 6,3 bar inlet pressure and 0,5 bar pressure drop.
For other styles of mounting bracket and accessories, please refer to page 162.

NOTE: End connectors required for use with quikclamps if directly mounting to pipework / fittings – contact us for further details.

EXCELON® PLUS MODULAR SYSTEM

Shut-off valves T84T – G3/8 … G1/2

- Excelon® Plus design allows in-line installation or modular installation with other Excelon® Plus products
- Rotating safety Shut off
- Tamper proof padlock feature on operating knob
- Full flow device

Technical Data

Medium:
Compressed air only

Maximum inlet pressure:
10 bar

Ambient temperature:
-20°C … +60°C
Air supply must be dry enough to avoid ice formation at temperatures below +2°C

Available from Summer 2017

T84T

Dimensions

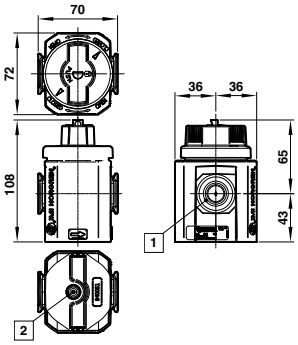

Models

Accessories

T84T series Model	Port Size	Function	Exhaust Port	Wall mounting bracket	Quikclamp	Quikclamp with bracket	Silencer	Plastic silencer
								
T84T-3GA-B1N	G3/8	3/2	G1/4	840024-50KIT	840014-51KIT	840014-52KIT	T40C2800	0146000000000000
T84T-4GA-B1N	G1/2	3/2	G1/4	840024-50KIT	840014-51KIT	840014-52KIT	T40C2800	0146000000000000

For other styles of mounting bracket and accessories, please refer to page 162.
NOTE: End connectors required for use with quikclamps if directly mounting to pipework / fittings – contact us for further details.

EXCELON® PLUS MODULAR SYSTEM

Accessories

Available from Summer 2017

SHUT-OFF VALVES

- Ideal for isolating sub-systems not in use
- Easy to operate – quarter turn device
- Lockable in the 'closed' position

WALL MOUNTING BRACKET

- Provides secure wall mounting for individual Excelon Plus products

QUIKCLAMP

- Allows easy connection of one Excelon Plus unit to another
- Uniquely, connected products can be rotated in 90° increments

QUIKCLAMPS AND WALL BRACKETS

- Allows easy connection of one Excelon Plus unit to another
- Uniquely, connected products can be rotated in 90° increments
- Secure mounting to a wall, panel or machine surface

FULL FLOW MANIFOLD BLOCK

- Provides a manifolding capability for up to 3 products, with G3/4 ports.
- Ideal for right-angled piping

PRESSURE SENSING BLOCK

- Provides 3 G1/4 auxiliary air outlets
- Ideal for adding a pressure switch to allow pressure sensing
- When placed between a filter-regulator and lubricator allows branching off to systems requiring a non-lubricated supply

PANEL MOUNTING RING

- Allows bonnets with panel mounting thread to be directly mounted

Models

Model Accessories	3/2 Shut-off valve*	Wall mounting bracket	Quikclamp	Quikclamps and wall brackets	Full Flow Manifold Block	Pressure Sensing Block	Panel Mounting Ring
							
	T84T-4GA-B1N	840024-50KIT	840014-51KIT	840014-52KIT	840028-53KIT	840016-51KIT	840048-89KIT

* Threaded exhaust port.

NOTE: End connectors required for use with quikclamps if directly mounting to pipework / fittings – contact us for further details.

EXCELON® MODULAR SYSTEM

Combination filter/regulators and lubricators BL72, BL73, BL74 – G1/4 … G1/2

- Shut off valve for safe isolation of supply
- General purpose filter removing condensate and particle contamination
- Regulator ensuring optimum working pressure for economy and safety
- Lubricator to deliver a correct level of oil lubrication into the downstream system optimising life expectancy of other products
- Sturdy bracket for correct mounting
- Pressure gauge for constant monitoring of output pressure

Technical Data

Medium:
Compressed air only

Maximum inlet pressure:
10 bar

Gauge ports:
Rc 1/8

Ambient temperature:
-20°C … +50°C
Air supply must be dry enough to avoid ice formation at temperatures below +2°C

Pressure range:
0,3 … 10 bar
Note: Outlet pressure can be adjusted in excess of and also less than those listed

BL72

BL73

BL74

Dimensions

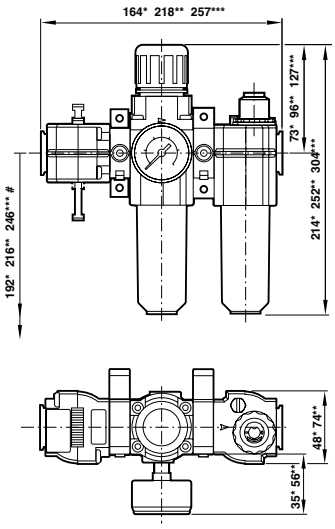

* BL72, ** BL73, *** BL74
# Minimum clearance required to remove bowl

Models

Boxed sets BL72, BL73 and BL74 with shut-off valve				Accessories	Service Kit	
Auto drain Model	Manual drain Model	Port size	Bowl	Tamper resistant kit	Auto drain	Manual drain
						
BL72-201GA	BL72-221G	G1/4	T	4255-51	B72G-KITA40R & L72M-KIT	B72G-KITM40R & L72M-KIT
BL73-301G	BL73-321G	G3/8	T	4455-51	B73G-KITA40R & L73M-KIT	B73G-KITM40R & L73M-KIT
BL74-401G	BL74-421G	G1/2	GT**	4355-51	B74G-KITA40R & L74M-KIT	B74G-KITM40R & L74M-KIT

**GT= Guarded transparent bowl.
T= Transparent bowl.

EXCELON® MODULAR SYSTEM

General purpose filters F72G, F73G, F74G – G1/4 … G1/2

- Excelon® design allows in-line installation or modular installation with other Excelon® products
- Quick release bayonet bowl

Technical Data

Medium:
Compressed air only

Maximum inlet pressure:
10 bar

Ambient temperature:
-34°C … +50°C
Air supply must be dry enough to avoid ice formation at temperatures below +2°C

F72G

F73G

F74G

Dimensions

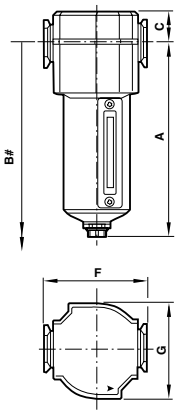

Minimum clearance required to remove bowl

Series	Drain	A	B	C	F	G
72	Auto	141	192	19	50	48
	Manual	134	185	19	50	48
73	Auto	147	207	25	68	62
	Manual	156	216	25	68	62
74	Auto	161	230	25	80	74
	Manual	177	246	25	80	74

Models

F72G series Auto drain Model	Manual drain Model	Port size	Flow* (dm³/s)	Element (µm)	Bowl	Wall mounting bracket	Auto drain	Manual drain
								
F72G-2GN-AL3	F72G-2GN-QT3	G1/4	28	40	T	4224-50	F72G-KITA40	F72G-KITM40

F73G series Auto drain Model	Manual drain Model	Port size	Flow* (dm³/s)	Element (µm)	Bowl	Wall mounting bracket	Auto drain	Manual drain
								
F73G-3GN-AT3	F73G-3GN-QT3	G3/8	35	40	T	4424-50	F73G-KITA40	F73G-KITM40

F74G series Auto drain Model	Manual drain Model	Port size	Flow* (dm³/s)	Element (µm)	Bowl	Wall mounting bracket	Auto drain	Manual drain
								
F74G-4GN-AP3	F74G-4GN-QP3	G1/2	83	40	GT	4324-50	F74G-KITA40	F74G-KITM40

GT= Guarded transparent bowl.
T= Transparent bowl.
* Typical flow with 6,3 bar inlet pressure and 0,5 bar pressure drop.

For other styles of mounting bracket and accessories, please refer to page 172.

EXCELON® MODULAR SYSTEM

‘Puraire’® high efficiency oil removal filters F72C, F73C, F74H – G1/4 … G3/4

- Excelon® design allows in-line installation or modular installation with other Excelon® products
- High efficiency oil and particle removal
- Quick release bayonet bowl
- Service indicator standard

Technical Data

Medium:
Compressed air only

Maximum inlet pressure:
10 bar transparent bowl or guarded
8 bar F72C with transparent bowl and auto drain

Remaining oil content:
0,01 mg/m³ at +21°C

Particle removal:
To 0,01 µm

Ambient temperature:
-34°C … +50°C
Air supply must be dry enough to avoid ice formation at temperatures below +2°C

F72C

F73C

F74H

Dimensions

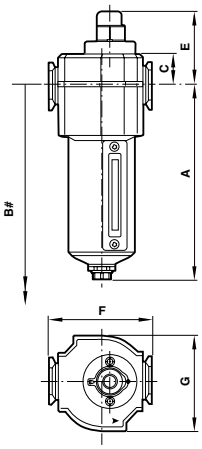

Minimum clearance required to remove bowl

Series	Drain	A	B	C	E	F	G
F72C	Auto	141	192	19	53	50	48
F73C	Auto	147	207	25	60	68	62
F74H	Auto	214	267	25	60	80	74

Typical performance characteristics

Inlet pressure (bar)	Maximum flow (dm³/s)		
	F72C	F73C	F74H
1	1,8	4,0	11,2
3	3,1	6,9	19,3
5	4,0	8,9	24,9
6,3	4,5	10,0	28,0
7	4,7	10,5	29,5
9	5,4	12,0	33,5

* Maximum flow to maintain stated oil removal performance.

Models

Auto drain				Accessories	Service Kit
Model	Port size	Flow* (dm³/s)	Bowl	Wall mounting bracket	
					
F72C-2GD-AL0	G1/4	4,5	T	4224-50	F72C-KITA0C
F73C-3GD-AT0	G3/8	10	T	4424-50	F73C-KITA0C
F74H-4GD-AP0	G1/2	28	GT	4324-50	F74H-KITA0C

GT= Guarded transparent bowl.
T= Transparent bowl.
* To maintain stated oil content at 6,3 bar inlet pressure.

For other styles of mounting bracket and accessories, please refer to page 172.

EXCELON® MODULAR SYSTEM

'Ultraire'® high efficiency oil vapour removal filters F72V, F74V – G1/4 … G1/2

- Excelon® design allows in-line or modular installation with other Excelon® products
- Adsorbing type activated carbon element removes oil vapours and most hydrocarbon odours
- Quick release bayonet bowl
- High Intensity blue colour change indication when contaminated
- Carbon pack service life 1000 hours at 21°C

Technical Data

Medium:
Compressed air only

Maximum inlet pressure:
F72V: 10 bar
F74V: 17 bar

Remaining oil content:
0,003 mg/m³ max. at +21°C

Ambient temperature:
Transparent bowl:
-34°C … +50°C (F72V)
Metal bowl: -34°C … +65°C (F74V)
Air supply must be dry enough to avoid ice formation at temperatures below +2°C

F72V

F74V

Dimensions

F72V

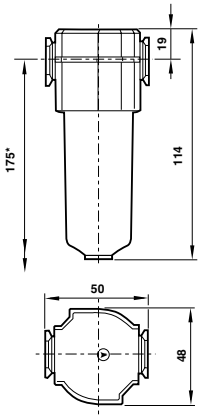

F74V

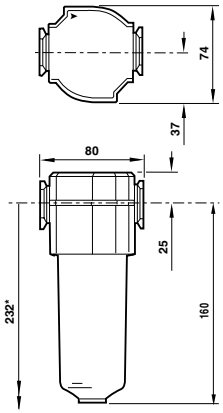

Minimum clearance required to remove bowl

Oil vapour removal filters must be protected upstream by an oil removal filter. A typical assembly:

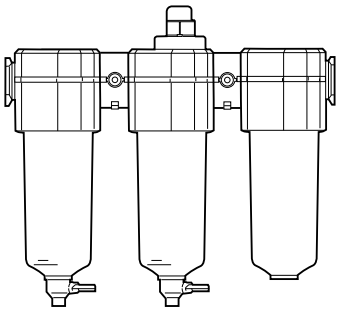

General purpose filter | Oil removal filter | Oil vapour removal filter

Models

F72V series Model	Port size	Flow* (dm³/s)	Bowl	Wall mounting bracket	
					
F72V-2GN-ETC	G1/4	1,6	T	4224-50	F72V-KITA0V

F74V series Model	Port size	Flow* (dm³/s)	Bowl	Wall mounting bracket	
					
F74V-4GN-EMA	G1/2	13	M	4324-50	F74V-KITA0V

M= Metal bowl.
T= Transparent bowl.
* To maintain stated oil content at 6,3 bar inlet pressure.

Accessories

Service Kit

For other styles of mounting bracket and accessories, please refer to page 172.

Typical performance characteristics

Inlet pressure (bar)	Maximum flow (dm³/s) F72V	Maximum flow (dm³/s) F74V
2,5	1,0	8,7
4	1,3	10,7
6,3	1,6	13,3
8	1,8	15,6
10	2,0	17,6

* Maximum flow to maintain stated oil removal performance.

EXCELON® MODULAR SYSTEM

Pressure regulators R72G, R73G, R74G – G1/4 … G1/2

- Excelon® design allows in-line or modular installation
- Balanced valve design for optimum pressure control
- Standard relieving models allow reduction of downstream pressure when the system is dead-ended
- Push to lock adjusting knob with tamper resistant accessory

Technical Data

Medium:
Compressed air only

Maximum inlet pressure:
20 bar

Gauge ports:
Rc1/8

Ambient temperature:
R72G: -34°C … +65°C
R73G & R74G: -34°C … +80°C
Air supply must be dry enough to avoid ice formation at temperatures below +2°C

Pressure range:
0,3 … 10 bar (Knob)
Note: Outlet pressure can be adjusted in excess of and also less than those listed

R72G

R73G & R74G

Dimensions

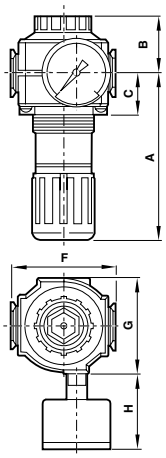

Series	A	B	C	F	G	H	Panel Ø	Panel depth
72	73	33	26	50	48	35	40	0 … 4
73	96	39	31	68	62	56	48	2 … 6
74	127	43	31	80	74	56	52	2 … 6

Models / Accessories / Service Kit

R72G series Model	Port size	Pressure range (bar)	Flow* (dm^3/s)	Wall mounting bracket	Neck mounting bracket	Gauge	Tamper resistant kit	
								
R72G-2GK-RMN	G1/4	0,3 … 10	33	4224-50	74316-50	18-013-989 (0 … 10 bar)	4255-51	R72G-KITR

R73G series Model	Port size	Pressure range (bar)	Flow* (dm^3/s)	Wall mounting bracket	Neck mounting bracket	Gauge	Tamper resistant kit	
								
R73G-3GK-RMN	G3/8	0,3 … 10	60	4424-50	4461-50	18-013-013 (0 … 10 bar)	4455-51	R73G-KITR

R74G series Model	Port size	Pressure range (bar)	Flow* (dm^3/s)	Wall mounting bracket	Neck mounting bracket	Gauge	Tamper resistant kit	
								
R74G-4GK-RMN	G1/2	0,3 … 10	105	4324-50	4368-51	18-013-013 (0 … 10 bar)	4355-51	R74G-KITR

* Typical flow with 10 bar inlet pressure and 1 bar droop from set pressure of 6,3 bar.

For other styles of mounting bracket and accessories, please refer to page 172.

EXCELON® MODULAR SYSTEM

Filter/regulators B72G, B73G, B74G – G1/4 … G1/2

- Excelon® design allows in-line installation or modular installation with other Excelon® products
- High efficiency water and particle removal
- Quick release bayonet bowl
- Push to lock adjusting knob with tamper resistant accessory

Technical Data

Medium:
Compressed air only

Maximum inlet pressure:
10 bar: Polycarbonate and Guarded Polycarbonate bowl

Pressure range:
0,3 … 10 bar - B72
0,7 … 17 bar - B73, B74

Gauge ports:
Rc1/8

Ambient temperature:
-34°C … +50°C
Air supply must be dry enough to avoid ice formation at temperatures below +2°C

B72G

B73G

B74G

Dimensions

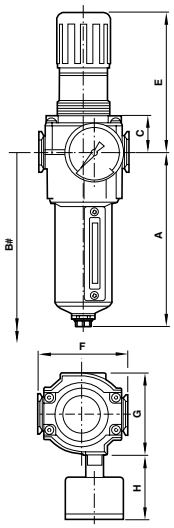

Minimum clearance required to remove bowl

Series	Drain	A	B	C	E	F	G	H	Panel Ø
72	Auto	141	192	26	73	50	48	35	40
	Manual	134	185	26	73	50	48	35	40
73	Auto	147	207	31	96	68	62	56	48
	Manual	156	216	31	96	68	62	56	48
74	Auto	161	230	31	127	80	74	56	52
	Manual	177	246	31	127	80	74	56	52

Models

Accessories

Service Kit

B72G series Auto drain Model	Manual drain Model	Port size	Pressure range (bar)	Flow* (dm³/s)	Element (µm)	Bowl	Wall mounting bracket	Neck mounting bracket	Gauge (0 … 10 bar)	Tamper resistant kit	Auto drain	Manual drain
												
B72G-2GK-AL3-RMN	B72G-2GK-QT3-RMN	G1/4	0,3 … 10	38	40	T	4224-50	74316-50	18-013-989	4255-51	B72G-KITA40R	B72G-KITM40R

B73G series Auto drain Model	Manual drain Model	Port size	Pressure range (bar)	Flow* (dm³/s)	Element (µm)	Bowl	Wall mounting bracket	Neck mounting bracket	Gauge**	Tamper resistant kit	Auto drain	Manual drain
												
B73G-3GK-AT3-RMN	B73G-3GK-QT3-RMN	G3/8	0,3 … 10	50	40	T	4424-50	4461-50	18-013-013	4455-51	B73G-KITA40R	B73G-KITM40R

B74G series Auto drain Model	Manual drain Model	Port size	Pressure range (bar)	Flow* (dm³/s)	Element (µm)	Bowl	Wall mounting bracket	Neck mounting bracket	Gauge**	Tamper resistant kit	Auto drain	Manual drain
												
B74G-4GK-AP3-RMN	B74G-4GK-QP3-RMN	G1/2	0,3 … 10	100	40	GT	4324-50	4368-51	18-013-013	4355-51	B74G-KITA40R	B74G-KITM40R

* Typical flow with 10 bar inlet pressure and 1 bar droop from set pressure of 6,3 bar.
** Pressure range: 18-013-013 = 0 … 10 bar; 18-013-014 = 0 … 25 bar.
For other styles of mounting bracket and accessories, please refer to page 172.

GT = Guarded transparent bowl.
T =Transparent bowl.

EXCELON® MODULAR SYSTEM

Lubricators L72M, L73M, L74M – G1/4 … G1/2

- Excelon® design allows in-line or modular installation
- Flow sensor provides a constant density of oil delivery over a wide range of flows
- All round (360°) visibility of sight-feed dome for ease of drip rate setting
- Micro-fog lubricators for best lubrication in general purpose pneumatic applications

Technical Data

Medium:
Compressed air only

Maximum inlet pressure:
10 bar

Start point:
L72M: 0,94 dm³/s,
L73M: 0,71 dm³/s
L74M: 0,94 dm³/s
Minimum flow required for lubricator operation at 6,3 bar inlet pressure

Bowl capacity:
L72M: 0,05 l
L73M: 0,10 l
L74M: 0,20 l

Ambient temperature:
-34°C … +50°C
Air supply must be dry enough to avoid ice formation at temperatures below +2°C

L72M

L73M

L74M

Dimensions

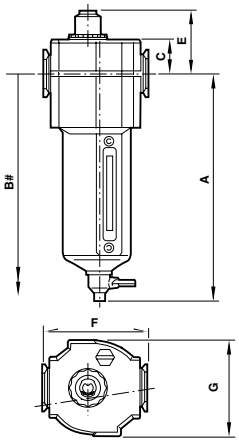

Series	A	B	C	E	F	G
72	110	191	19	41	50	48
73	156	255	25	46	68	62
74	177	276	25	46	80	74

Minimum clearance required to remove bowl

PRODUCT PLUS

Have you thought about...

Whilst non lubricated systems are best from an environmental point of view, the operating life of virtually all products can be extended up to 400% by using a correctly sized and adjusted lubricator

Models

L72M series Auto drain Model	Type	Port size	Flow* (dm³/s)	Bowl	Wall mounting bracket	Auto drain
						
L72M-2GP-ETN	Micro-fog	G1/4	24	T	4224-50	L72M-KIT

L73M series Auto drain Model	Type	Port size	Flow* (dm³/s)	Bowl	Wall mounting bracket	Auto drain
						
L73M-3GP-ETN	Micro-fog	G3/8	38	T	4424-50	L73M-KIT

L74M series Auto drain Model	Type	Port size	Flow* (dm³/s)	Bowl	Wall mounting bracket	Auto drain
						
L74M-4GP-QPN	Micro-fog	G1/2	73	GT	4324-50	L74M-KIT

* Typical flow with 6,3 bar inlet pressure and 0,5 bar pressure drop.
For other styles of mounting bracket and accessories, please refer to page 172.

GT= Guarded transparent bowl.
T= Transparent bowl.

EXCELON® MODULAR SYSTEM

Soft start/dump valves P72F, P74F – G1/4 … G1/2

- Assists machine designers in complying with the European Machineries Directive
- Can help existing machinery to comply with PUWER (Provision and Use of Work Equipment Regulations)
- Controlled increase of downstream pressure on start up
- High forward flow capacity
- High flow dump facility

Technical Data

Medium:
Compressed air only

Maximum operating pressure:
10 bar (solenoid pilot operated),
17 bar (air pilot operated)

Minimum operating pressure:
3 bar

Ambient temperature:
P72F: -20°C … + 65°C
P74F: -20°C … + 80°C
Air supply must be dry enough to avoid ice formation at temperatures below +2°C

Air pilot port:
P72F M5, P74F Rc1/4

Exhaust port:
P72F Rc1/4, P74F G1/2

Maximum flow:
P72F 21 dm^3/s, P74F 57 dm^3/s
Note: Maximum flow with 6,3 bar inlet pressure and pressure drop of 0,5 bar

Snap pressure:
Full flow when downstream pressure reaches 50-80% of inlet pressure

P72F

P74F

Dimensions

P72F

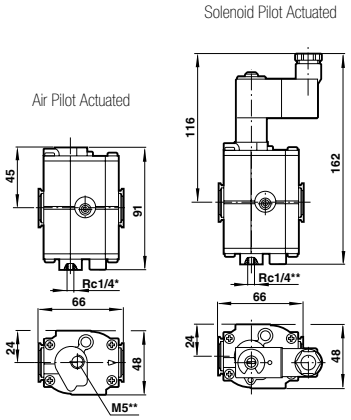

* Exhaust port
** Pilot port

P74F

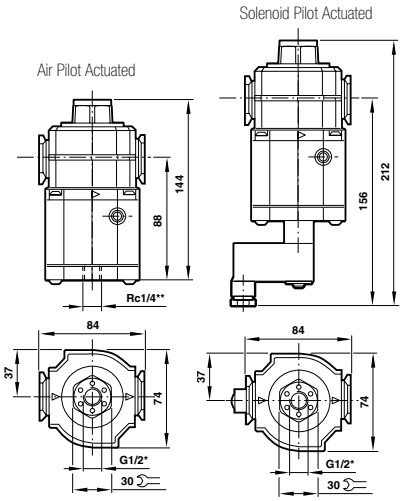

Models

P72F series - 24V d.c. Solenoid pilot operated Model	Air pilot operated Model	Port size	Silencer	Basic solenoid plug
				
P72F-2GC-PFN	P72F-2GA-NNN	G1/4	MB002B	0657868000000000

P74F series - 24V d.c. Solenoid pilot operated Model	Air pilot operated Model	Port size	Silencer	Basic solenoid plug
				
P74F-4GC-PFN	P74F-4GA-NNN	G1/2	MB004B	0657868000000000

Accessories

For mounting bracket and accessories, please refer to page 172.

EXCELON® MODULAR SYSTEM

Pressure relief valves V72G, V74G – G1/4 … G 1/2

- Excelon® design allows in-line installation or modular installation with other Excelon® products (V72G only)
- Push to lock adjusting knob with tamper resistant accessory
- Helps protect air operated equipment from over pressurisation

IMI Precision Engineering pressure relief valves comply with category O(S.E.P.) and category 1 of the Pressure Equipment Directive 97/23/EC.

Technical Data

Medium:
Compressed air only

Gauge ports:
Rc1/8

Relief port:
V72G: Rc1/4
V74G: G1/2

Ambient temperature:
V72G: -34°C … +65°C
V74G: -34°C … +80°C
Air supply must be dry enough to avoid ice formation at temperatures below +2°C

Relief pressure adjustment range:
0,3 … 10 bar
Note: Outlet pressure can be adjusted in excess of and also less than those listed

V72G

V74G

Dimensions

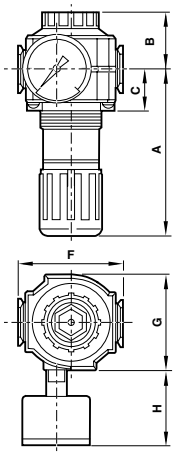

Series	A	B	C	F	G	H	Panel Ø	Panel depth
72	73	25	26	50	48	35	40	0 … 4
74	127	43	31	80	74	56	52	2 … 6

Models

Accessories

V72G series Model	Port size	Wall mounting bracket	Neck mounting bracket	Gauge 0 … 10 bar	Tamper resistant kit	Silencer
						
V72G-2GK-NMN	G1/4	4224-50	74316-50	18-013-989	4255-51	MB002B

V74G series Model	Port size	Wall mounting bracket	Neck mounting bracket	Gauge 0 … 10 bar	Tamper resistant kit	Silencer
						
V74G-4GK-NMN	G1/2	4324-50	4368-51	18-013-013	4355-51	MB004B

For other styles of mounting bracket and accessories, please refer to page 172.

EXCELON® MODULAR SYSTEM

Accessories

SHUT-OFF VALVES

- Ideal for isolating sub-systems not in use
- Easy to operate – low stiction
- Lockable in the 'closed' position

WALL MOUNTING BRACKET

- Provides secure wall mounting for individual Excelon® products*

* Except P72, P74, T73 and T74 units

QUIKCLAMP

- Allows easy connection of one Excelon® unit to another
- One piece – no loose parts
- Uniquely, connected products can be rotated in 90° increments

QUIKCLAMPS AND WALL BRACKETS

- Allows easy connection of one
- Excelon® unit to another
- One piece – no loose parts
- Uniquely, connected products can be rotated in 90° increments
- Secure mounting to a wall, panel or machine surface

MANIFOLD BLOCK

- Provides a manifolding capability for up to 3 products, e.g. 3 pressure regulators can be mounted on one block to provide 3 different secondary pressures from a common primary pressure
- Ideal for right-angled piping

PORTING BLOCK

- Provides 3 G1/4 auxiliary air outlets
- Ideal for branching off to smaller sub-systems
- When placed between a filter-regulator and lubricator allows branching off to systems requiring a non-lubricated supply

QUIKMOUNT PIPE ADAPTORS

- Use with Quikclamps to provide threaded connections to system piping
- Can be used on products with unthreaded ports

PANEL MOUNTING RING

- Allows bonnets with panel mounting thread to be directly mounted

Models

Series	Port size	3/2 Shut-off valve*	Wall mounting bracket	Quikclamp	Quikclamps and wall brackets	Manifold block	Porting block	Quikmount pipe adaptors	Panel Mounting Ring
				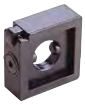					
72	G1/4	T72T-2GA-P1N	4224-50	4214-51	4214-52	4228-03	4216-52	4215-08	4248-89
73	G3/8	T73T-3GA-P1N	4424-50	4314-51	4314-52	4328-53	4316-52	4315-10	5191-88
74	G1/2	T74T-4GA-P1N	4324-50	4314-51	4314-52	4328-53	4316-52	4315-11	4348-89

* Threaded exhaust port.

MINIATURE UNITS, GENERAL PURPOSE

Combination filter/regulators and lubricators P1H – G1/8, G1/4

- Combinations of filter-regulators and lubricators can be ordered as pre-assembled units
- Complete control of filtration, regulation and lubrication at a single point
- Micro-fog versions for most general purpose pneumatic applications

Technical Data

Medium:
Compressed air only

Maximum inlet pressure:
10 bar

Ambient temperature:
-20°C … +50°C
Air supply must be dry enough to avoid ice formation at temperatures below +2°C

Pressure range:
0,3 … 10 bar
Note: Outlet pressure can be adjusted in excess of and also less than those listed

Dimensions

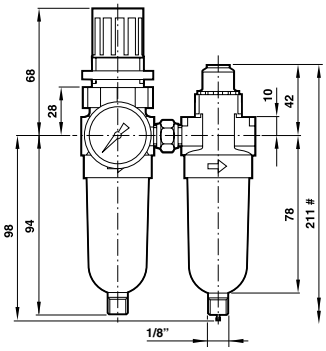

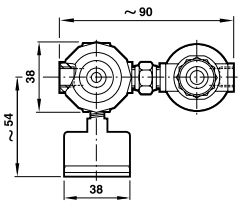

Minimum clearance required to remove bowl

PRODUCT LINKS

Have you thought about...

See our 60 series ball valves or our Pneufit C versions complete with push in fittings on Fittings, Tubing and Accessories section

Models / Accessories / Service Kit

P1H series Auto drain Model	Manual drain Model	Port size	Neck mounting bracket and nut	Gauge 0 … 10 bar	Auto drain	Manual drain
						
P1H-100-A3QG	P1H-100-M3QG	G1/8	18-025-003	18-013-989	B07-KITA40R & L07-KIT	B07-KITM40R & L07-KIT
P1H-200-A3QG	P1H-200-M3QG	G1/4	18-025-003	18-013-989	B07-KITA40R & L07-KIT	B07-KITM40R & L07-KIT

* Typical flow with 10 bar inlet pressure and 1 bar droop from set pressure of 6,3 bar.

MINIATURE UNITS, GENERAL PURPOSE

Filter F07 – G1/8, G1/4

- Direct ported filters with high water removal efficiency
- Automatic drains supplied as standard
- High flow miniature unit
- Transparent bowl for 360° visibility

Technical Data

Medium:
Compressed air only

Maximum inlet pressure:
10 bar

Ambient temperature:
-34°C … +50°C
Air supply must be dry enough to avoid ice formation at temperatures below +2°C

Dimensions

Manual drain

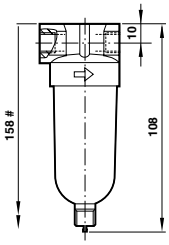

Auto drain

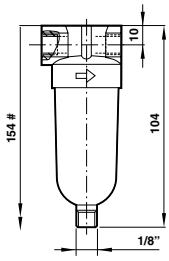

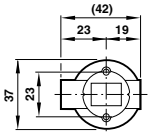

Minimum clearance required to remove bowl

Models

F07 series Auto drain Model	Manual drain Model	Port size	Flow* (dm^3/s)	Element (µm)	Accessories: Wall mounting bracket	Service Kit: Auto drain	Service Kit: Manual drain
							
F07-100-A3TG	F07-100-M3TG	G1/8	9	40	5939-06	F07-KITA40	F07-KITM40
F07-200-A3TG	F07-200-M3TG	G1/4	11,5	40	5939-06	F07-KITA40	F07-KITM40

* Typical flow with 6,3 bar inlet pressure and 0,5 bar pressure drop.

MINIATURE UNITS, PURAIRE® OIL REMOVAL

Filter F39 – G1/8, G1/4

- Very compact unit
- Maximum remaining oil content and particle removal to 0,01µm

Technical Data

Medium:
Compressed air only

Maximum inlet pressure:
10 bar Transparent bowl

Filter element:
0,01 µm

Remaining oil content:
0,01 ppm at +21°C

Bowl size:
31 ml

Drain:
Manual or automatic

Ambient/Media temperature:
Transparent bowl -34 … +50°C
Air supply must be dry enough to avoid ice formation at temperatures below +2°C
Note: Install an F07 filter with a 5 µm filter element upstream of the F39 filter for maximum service life.

Dimensions

Manual drain

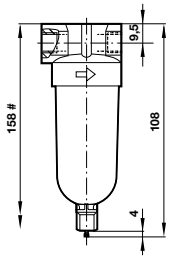

Auto drain

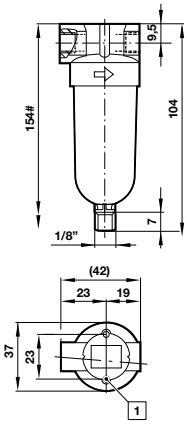

Minimum clearance required to remove bowl

Typical performance characteristics

Inlet pressure (bar)	Flow * (dm3/s)
1	1,2
3	2
5	2,7
6,3	3
7	3,1
9	3,6

* Maximum flow to maintain stated oil removal performance.

Models

F39 series Auto drain Model	Manual drain Model	Port size	Flow* (dm^3/s)	Element (µm)	Accessories: Wall mounting bracket	Service Kit: Auto drain	Service Kit: Manual drain
							
F39-100-A0TG	F39-100-M0TG	G1/8	2,8	0,01	5939-06	F39-KIT0C	F39-KIT0C
F39-200-A0TG	F39-200-M0TG	G1/4	3	0,01	5939-06	F39-KIT0C	F39-KIT0C

* Max. flow at 6,3 bar.

MINIATURE UNITS, GENERAL PURPOSE

Pressure regulator R07 – G1/8, G1/4

- Ported regulators for general purpose pneumatic applications
- Relieving operation as standard
- Non-rising adjusting knob with snap-action lock

Technical Data

Medium:
Compressed air only

Maximum inlet pressure:
20 bar

Gauge ports:
Rc1/8

Ambient temperature:
-34°C … +65°C
Air supply must be dry enough to avoid ice formation at temperatures below +2°C

Pressure range:
0,3 … 7 bar
Note: Outlet pressure can be adjusted in excess of and also less than those listed

Dimensions

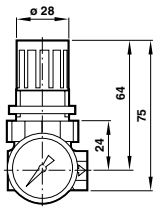

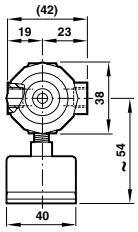

Models

R07 series Model	Port size	Outlet pressure range (bar)	Flow* (dm^3/s)	Neck mounting bracket (incl. nut)	Mounting nut only plastic	Mounting nut only metal	Gauge 0 … 10 bar	Service Kit
								
R07-100-RNKG	G1/8	0,3 … 7	6,5	18-025-003	2962-89	2962-04	18-013-989	R07-KITR
R07-200-RNKG	G1/4	0,3 … 7	6,5	18-025-003	2962-89	2962-04	18-013-989	R07-KITR

* Typical flow with 10 bar inlet pressure and 1 bar droop from set pressure of 6,3 bar.

MINIATURE UNITS, GENERAL PURPOSE

Filter regulator B07 – G1/8, G1/4

- Filter-regulators for all general purpose pneumatic applications
- High performance design provides high flow with minimum pressure drop
- Non-rising adjusting knob has snap-action lock
- Transparent bowl for 360° visibility

Technical Data

Medium:
Compressed air only

Maximum inlet pressure:
10 bar

Gauge ports:
Rc1/8

Pressure range:
0,3 … 7 bar
Note: Outlet pressure can be adjusted in excess of and also less than those listed

Ambient temperature:
-34°C … +50°C
Air supply must be dry enough to avoid ice formation at temperatures below +2°C

Dimensions

Auto drain

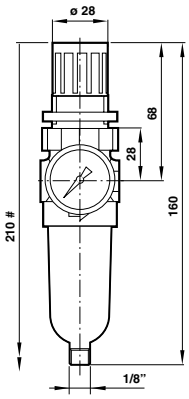

Manual drain

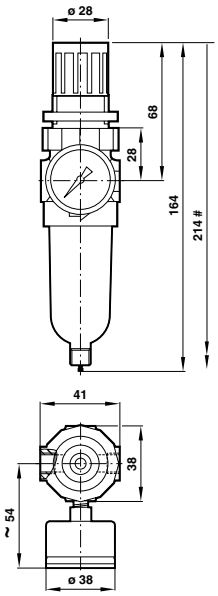

Minimum clearance required to remove bowl

Models

B07 series Auto drain Model	Manual drain Model	Port size	Pressure range (bar)	Flow* (dm^3/s)	Element (µm)	Bowl
						
B07-101-A3KG	B07-101-M3KG	G 1/8	0,3 … 7	6,2	40	T
B07-201-A3KG	B07-201-M3KG	G 1/4	0,3 … 7	6,5	40	T

Accessories

Wall mounting bracket (incl. nut)	Mounting nut only plastic	Mounting nut only metal	Gauge 0 … 10 bar
			
18-025-003	2962-89	2962-04	18-013-989
18-025-003	2962-89	2962-04	18-013-989

Service Kit

Auto drain	Manual drain
	
B07-KITA40R	B07-KITM40R
B07-KITA40R	B07-KITM40R

* Typical flow with 10 bar inlet pressure and 1 bar droop from set pressure of 6,3 bar. T= Transparent bowl.

MINIATURE UNITS, GENERAL PURPOSE

Lubricators L07 – G1/8, G1/4

- Micro-fog lubricators provide a fine mist for most general purpose pneumatic applications
- Transparent bowl for 360° visibility

Technical Data

Medium:
Compressed air only

Maximum inlet pressure:
10 bar

Start point:
0,24 dm^3/s
Minimum flow required for lubricator operation at 6,3 bar inlet pressure

Ambient temperature:
-20°C … +50°C
Air supply must be dry enough to avoid ice formation at temperatures below +2°C

Dimensions

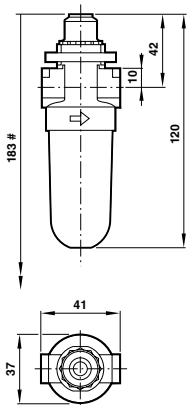

Minimum clearance required to remove bowl

Models

L07 series Model	Port size	Flow* (dm^3/s)	Accessories Neck mounting bracket and nut	Service Kit
				
L07-100-MPQG	G1/8	5	18-025-003	L07-KIT
L07-200-MPQG	G1/4	6,7	18-025-003	L07-KIT

* Typical flow with 6,3 bar inlet pressure and 0,5 bar pressure drop.

MINIATURE UNITS, GENERAL PURPOSE

Pressure relief valve – Diaphragm type V07 – G1/8, G1/4

- Protect compressed air systems from over-pressurisation

IMI Precision Engineering pressure relief valves comply with category O(S.E.P.) and category 1 of the Pressure Equipment Directive 97/23/EC.

Technical Data

Medium:
Compressed air only

Gauge ports:
Rc1/8

Relief port:
As inlet port

Ambient temperature:
-34°C … +65°C
Air supply must be dry enough to avoid ice formation at temperatures below +2°C

Relief pressure adjustment range:
0,3 … 7 bar

Dimensions

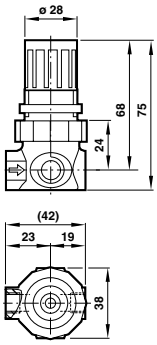

Models

V07 series Model	Port size	Inlet Pressure (bar)	Relief Pressure (bar)
			
V07-100-NNKG	G1/8	20	0,3 … 7
V07-200-NNKG	G1/4	20	0,3 … 7

Accessories

Neck mounting bracket and nut	Gauge 0 … 10 bar
	
18-025-003	18-013-989
18-025-003	18-013-989

LARGE CAPACITY GENERAL PURPOSE UNITS

General purpose filters F18 – G1 1/2 & 2

- Direct ported filter with high water removal efficiency
- High flow with minimal pressure drop
- Highly visible prismatic liquid level indicator lens

Technical Data

Medium:
Compressed air only

Maximum pressure:
17 bar

Ambient temperature:
-34°C … +80°C

Particle removal:
40 µm

Dimensions

Manual drain

Auto drain

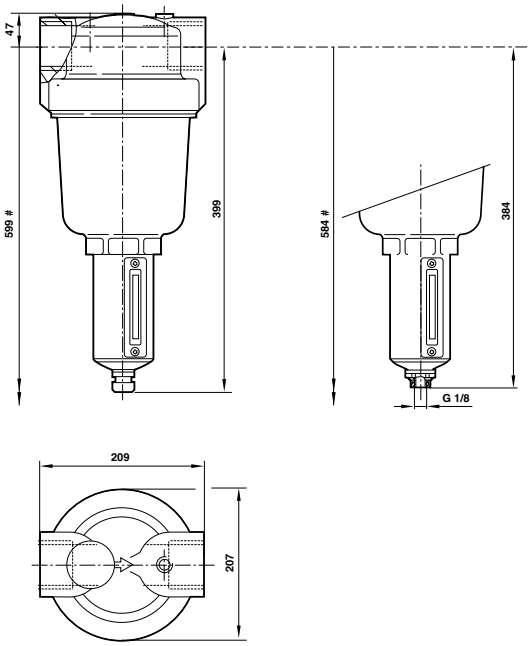

Minimum clearance required to remove bowl

Models

Service Kit

F18 - Model Auto drain	Port size	Flow* (dm³/s)	Element Size	Bowl	
					
F18-B00-A3DG	G1 1/2	765	40 µm	Metal	F18-100A
F18-C00-A3DG	G2	765	40 µm	Metal	F18-100A

LARGE CAPACITY PILOT OPERATED REGULATORS

11-808, R18, 11-400/11-204 – G1/4 ... G2

- Can be installed at any point in the compressed air system without regard to accessibility – pilot regulator can be installed in the most convenient location
- Can be used wth conventional or feedback pilot regulator
- Feedback pilot regulator senses downstream pressure and automatically adjusts pilot operated regulator outlet pressure

Technical Data

Medium:
Compressed air only

Maximum inlet pressure:
11-808: 20 bar
11-400: 25 bar
R18: 31 bar

Ambient temperature:
-20°C … +80°C
Air supply must be dry enough to avoid ice formation at temperatures below +2°C

11-808

R18 remote pilot

R18 integral pilot

Dimensions

11-808

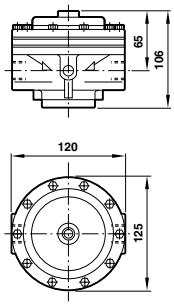

R18 remote pilot

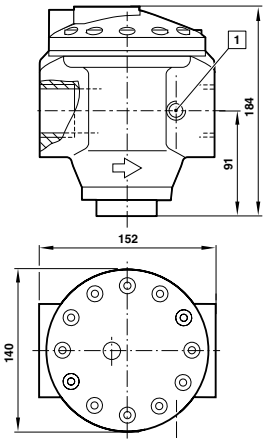

1 Gauge port

R18 integral pilot

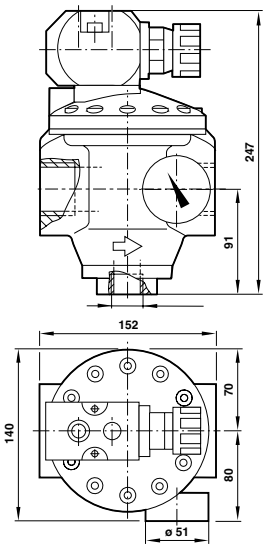

Models

R18 remote pilot						Exhaust silencer	Gauge adaptor	Gauge** 0 … 25 bar	
Model	**Port size**	**Flow* (dm³/s)**	**Pressure range (bar)**	**Operation**	**Adjustment method**				
									
R18-B00-RNXG	G1 1/2	944	0,16 … 17	Relieving	Remote pilot	MB006B	150232818	18-013-014	R18-100R
R18-C00-RNXG	G2	944	0,16 … 17	Relieving	Remote pilot	MB006B	150232818	18-013-014	R18-100R

R18 integral pilot						Exhaust silencer	Gauge adaptor	Gauge** 0 … 10 bar	
Model	**Port size**	**Flow* (dm³/s)**	**Pressure range (bar)**	**Operation**	**Adjustment method**				
									
R18-C05-RNLG	G2	944	0,3 … 8,5	Relieving	Integral pilot	MB006B	150232818	18-013-013	R18-100R & 5945-41

* Max. flow with 7 bar inlet pressure. 6,3 bar outlet pressure and a droop of 1 bar from set.
Alternative models available – contact IMI Precision Engineering technical service.

11-808 series						Wall mounting bracket	Gauge** 0 … 25 bar	
Model	**Port size**	**Flow* (dm³/s)**	**Pressure range (bar)**	**Operation**	**Adjustment method**			
								
11-808-960	G3/4	180	20 Max.	Relieving	Remote pilot	18-001-027	18-013-014	11-908-100
11-808-980	G1	180	20 Max.	Relieving	Remote pilot	18-001-027	18-013-014	11-908-100

* Max. flow with 8 bar inlet pressure, 6,3 bar outlet pressure and a droop of 1 bar from set.
** Alternative gauges available see page 185.

Accessories

Service Kit

PILOT OPERATED REGULATORS

11-808, R18, 11-400 – G1/4 ... G2

11-400/11-204

Conventional pilot

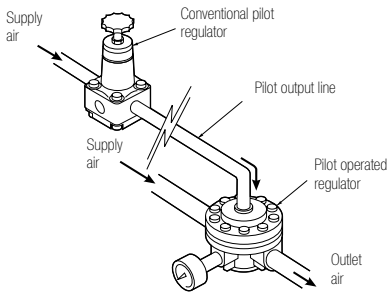

Feedback pilot

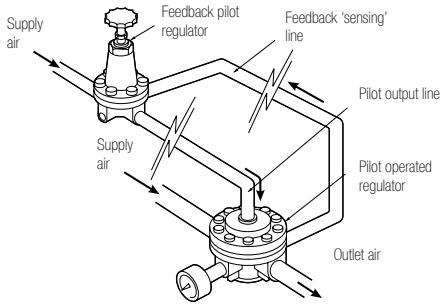

Feedback pilot regulators give more sensitive control and quicker reaction to downstream pressure changes
Feedback 'sensing' line to be kept to miniumum length (<200 mm)

Dimensions

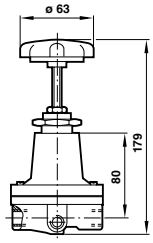

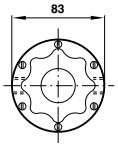

Model

Conventional pilot regulators

Accessories

Service Kit

11-400, 20AL series					Bracket	Gauge	
Model	Port size	Pressure range (bar)	Operation	Mounting			
							
11400-2G-PC100	G1/4	0,06 … 2	Relieving	Bracket	18-001-005	18-013-010	11400-100-20AL
11400-2G-PE100	G1/4	0,06 … 4	Relieving	Bracket	18-001-005	18-013-011	11400-100-20AL
11400-2G-PG100	G1/4	0,16 … 7	Relieving	Bracket	18-001-005	18-013-012	11400-100-20AL
20AL-X2G-PK100	G1/4	7 … 20	Relieving	Bracket	18-001-005	18-013-014	11400-100-20AL

MINIATURE PRE-SET REGULATOR

R16 G1/4"

- Factory pre-set and sealed to give a regulated pressure of 2 bar
- Tamper resistant
- Compact

Technical Data

Medium:
Compressed air only

Maximum pressure:
28 bar

Ambient temperature:
-20°C … +80°C
Air supply must be dry enough to avoid ice formation at temperatures below +2°C

Typical Setting Accuracy of Regulator with 7 bar inlet pressure and zero flow:
2 bar (+0,07 bar, - 0,2 bar)

Gauge ports:
Rc 1/8

Dimensions

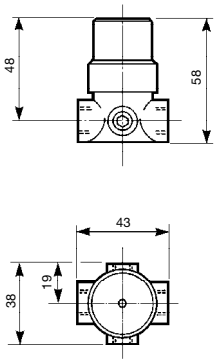

PRODUCT LINKS

Perfect partners...

To fully comply with legislation and ensure maximum safety of operators this regulator should be used on blow gun installations, and for greater cost efficiency holds the maximum pressure at 2 bar. For best practice, the R16 should also be coupled with a safety blow gun, coiled hose assemblies and a quick release coupling.

See Fittings, Tubing and Accessories section

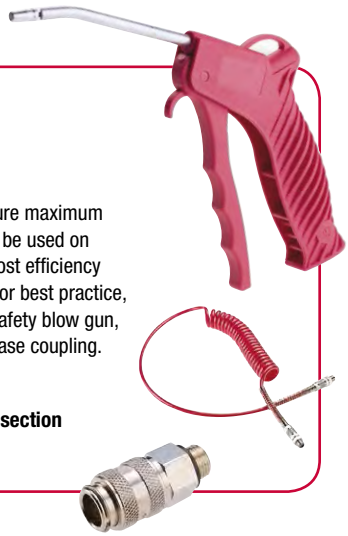

Models

Model	Port size	Pre-set pressure
R16-200-R30G	G1/4	2 bar

PRECISION & INSTRUMENT REGULATOR

Pressure regulator R27-200, 11-818 – G1/4

R27-200:

- High precision regulator using a control chamber instead of a spring, so increasing its sensitivity to any variations and eliminating any spring hysteresis
- Perfect for dead-end applications
- Excellent long term stability

11-818:

- Precision instruments with integral pilot to ensure very close pressure control in a compact form
- Unit double filters air before reaching pilot valve to help prevent leakage and malfunction
- Panel mounting facility

* Not recommended for dead-end applications

Technical Data

Medium:
Dry, oil free air, filtered to 5µm

Maximum inlet pressure:
R27: 10 bar (minimum 0,2 above output)
11-818 Low pressure: 8 bar
11-818 Standard pressure: 10 bar
11-818 High pressure: 14 bar

Ambient temperature:
R27: -20°C … +70°C
11-818: 0°C … +70°C

R27-200

11-818

Dimensions

11-818

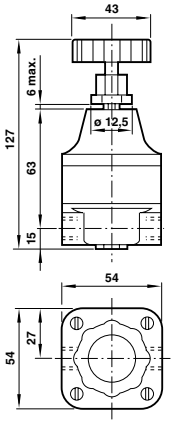

R27-200

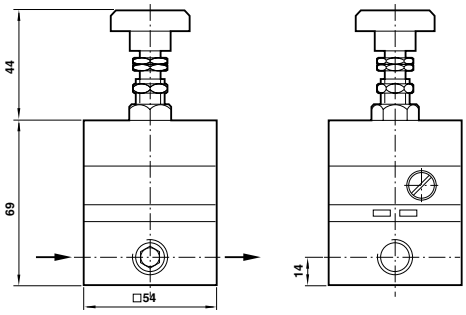

Models

11-818 series Model	Port size	Pressure range (bar)	Flow* (dm^3/s)	Accuracy # (bar)	Operation	Gauge ports	Panel mounting nut
11-818-999	G1/4	0,02 … 0,50 (low)		0,01	Relieving	–	3081-01
11-818-100	G1/4	0,07 … 4 (standard)	8	0,03	Relieving	–	3081-01
11-818-110	G1/4	0,4 … 10 (high)		0,05	Relieving	–	3081-01
11-818-987	G1/4	0,02 … 0,50 (low)		0,01	Relieving	R1/4	3081-01
11-818-993	G1/4	0,07 … 4 (standard)	8	0,03	Relieving	R1/4	3081-01
11-818-991	G1/4	0,4 … 10 (high)		0,05	Relieving	R1/4	3081-01

* Typical flow with 8 bar inlet pressure and 0,05 bar droop from set pressure of 4 bar # Typical mid range variance from set pressure with 7 bar inlet at 2 dm^3/s flow.
Note: 11-818 is not a constant bleed device, when being used under flow conditions no air is consumed. Air bleed is only effective under zero flow conditions as in a dead end application.

Accessories

R27-200 series Model	Port size	Pressure range (bar)	Flow* (dm^3/s)	Hysteresis/ repeatability#	Sensitivity	Operation	Gauge ports
R27-200-RNCG	G1/4	0,14 … 2,0	8	< 0,05%	> 0,3 mbar	Relieving	G1/4
R27-200-RNFG	G1/4	0,14 … 4,0	8	< 0,05%	> 0,3 mbar	Relieving	G1/4
R27-200-RNLG	G1/4	0,14 … 8,0	8	< 0,05%	> 0,3 mbar	Relieving	G1/4

* Maximum flow achieved under ideal conditions. # Typical values at mid range.
Note: R27 reglators are designed as constant bleed devices and consume air, typically less than 0,016 dm^3/s.

AIR PREPARATION ACCESSORIES

Gauges, Auto-drain, Drip leg drain

GAUGES

- Monitor pressures in a compressed air system for optimum efficiency
- Choice of pressure ranges
- Direct or panel mounted

Standard Steel and plastic

Model	Pressure range (bar)	Nominal diameter (mm)	Connection type / mounting	Port connection
18-013-887	0 … 1	40	Centre Back	R1/8
18-013-991	0 … 1,6	40	Centre Back	R1/8
18-013-886	0 … 2,5	40	Centre Back	R1/8
18-013-990	0 … 4	40	Centre Back	R1/8
18-013-885	0 … 6	40	Centre Back	R1/8
18-013-989	0 … 10	40	Centre Back	R1/8
18-013-884	0 … 16	40	Centre Back	R1/8
18-013-908	0 … 25	40	Centre Back	R1/8
18-013-010	0 … 1,6	50	Centre Back	R1/8
18-013-011	0 … 4	50	Centre Back	R1/8
18-013-012	0 … 6	50	Centre Back	R1/8
18-013-013	0 … 10	50	Centre Back	R1/8
18-013-014	0 … 25	50	Centre Back	R1/8
18-013-893	0 … 1	63	Centre Back	R1/8
18-013-892	0 … 2,5	63	Centre Back	R1/8
18-013-856	0 … 10	63	Centre Back	R1/8
18-013-855	0 … 16	63	Centre Back	R1/8
18-013-888	0 … 25	63	Centre Back	R1/8
18-013-879	0 … 1,6	40	Panel Mounted	G1/8A
18-013-878	0 … 6	40	Panel Mounted	G1/8A
18-013-877	0 … 10	40	Panel Mounted	G1/8A
18-013-858	0 … 6	50	Panel Mounted	G1/8A
18-013-857	0 … 10	50	Panel Mounted	G1/8A
18-013-883	0 … 1,6	63	Panel Mounted	G1/4A
18-013-882	0 … 6	63	Panel Mounted	G1/4A
18-013-852	0 … 10	63	Panel Mounted	G1/4A
18-013-851	0 … 16	63	Panel Mounted	G1/4A
18-013-024	0 … 1,6	50	Bottom	R1/8
18-013-025	0 … 4	50	Bottom	R1/8
18-013-026	0 … 6	50	Bottom	R1/8
18-013-027	0 … 10	50	Bottom	R1/8
18-013-028	0 … 25	50	Bottom	R1/8
18-013-854	0 … 10	63	Bottom	G1/4A
18-013-853	0 … 16	63	Bottom	G1/4A

Dimensions

Bottom

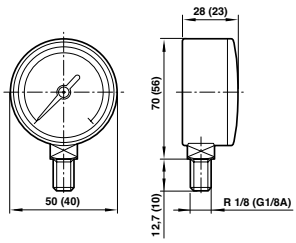

Panel mounting

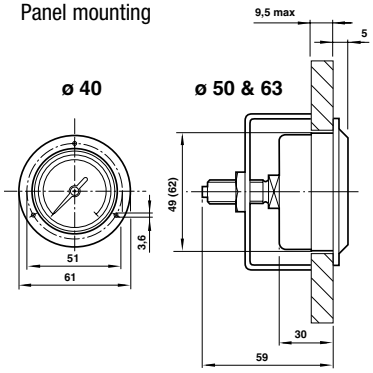

Centre back

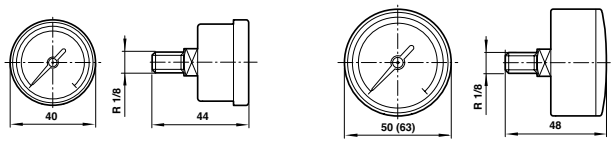

DRIP LEG DRAIN

- Fully automatic unit that can drain liquid from low points in compressed air systems

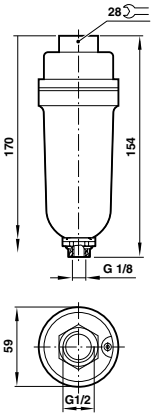

Models

Model	Port size	Bowl
17-816-998	G1/2	Metal
17-816-999	G1/2	Transparent

AUTO-DRAIN

- Spare parts for filters and filter/regulators

Models

Model	Bowl
4000-50R	Excelon 72
4000-51R	Excelon 73
3000-97	Excelon 74
6000-50	Olympian 64, 68

Fittings, tubing & accessories

The product group most associated with the 'Enots' brand, fittings are of vital importance, since they are used to connect all other products and make them operate. The IMI Precision Engineering range includes labour saving push in types in composite, brass and stainless steel for all manner of applications.

We then have compression fittings ranges suitable for heavier industry and even a push in fitting suitable for vehicle braking systems.

Add to this a whole selection of BSP connectors, flow regulators, non return valves, air fuses, blow guns, flexible hoses and quick release connectors and you have one of the industries' largest accessory ranges around.

Fast Find Guide

Please note: These products represent only part of the IMI Precision Engineering fittings range. If you can't see the option you require please contact us.

Fittings

Pneufit push-in fittings Ø 4 … 14 mm  Page 189	**Pneufit C composite fittings** Ø 3 … 16 mm  Page 189	**BSP & hose fittings** M5, 1/8" … 1" BSP  Page 199	**Pneufit C selection box**  Page 198

Tubing & Hoses

Nylon tubing Ø 4 … 16 mm 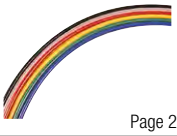 Page 202	**Polyurethane tubing** Ø 4 … 12 mm 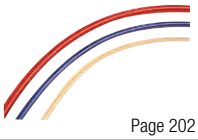 Page 202	**Pneuflex tubing** Ø 6 … 8 mm  Page 202	**Tube cutter**  Page 203	**Tubing channels & clips** Ø 6 … 8 mm  Page 203

Accessories

M/S Porous plastic silencers M5, G1/8 … G1  Page 204	**T40 series** Sintered bronze silencers M5, G1/8 … G1  Page 204	**M/1500 series** Exhaust filters G1/8 … G1  Page 204	**MB series** Silencers R1/8 … R1  Page 205	**238 series** Single shut off quick release couplings  Page 206	**60 series** Ball valves 1/8" … 1 1/2"  Page 207
M/7300 Sleeve valve G1/8 … G1/2  Page 208	**BG series** Blow guns  Page 208	**T1000 Uni-directional** M5, G1/8 … G1/2  Page 209	**T1100 Bi-directional** G1/8 … G1/2  Page 209	**T20** M5, G1/8 … G1/2  Page 210	**COT, COK, COS, COL BANJO FLOW REGULATORS** (COMPOSITE BODY)  Page 196
10K51, BANJO FLOW REGULATORS (METAL BODY)  Page 196	**16K51, BANJO FLOW REGULATORS** (METAL BODY)  Page 201	**C00GL** **Non-return valves** Ø 4 … 12 mm  Page 211	**T70** **Quick exhaust valves** G1/8 … G1/2  Page 212		

PUSH-IN FITTINGS

PNEUFIT

Metric Ø 4 … 14 mm O/D tube

- Compact units featuring retained collets and positive tube anchorage
- Silicone free O-ring seals
- Non-PTFE based thread sealant on all BSP taper threads
- Easy tube insertion for rapid assembly
- Internal hexagon on straight adaptors allows assembly in confined spaces
- Wide range of types available
- Reliable and corrosion resistant

Technical Data

Medium:
Compressed air

Operating pressure:
Vacuum – 18 bar unless otherwise stated (dependant on tubing specification)

Ambient temperature:
-20°C … +80°C
Air supply must be dry enough to avoid ice formation at temperatures below +2°C

Tubing:
Nylon 11 or 12, polyurethane 85 to 98

Materials

Body:
Nickel plated brass or glass filled nylon

Collet:
Nickel plated brass

'O' ring:
Silicone free nitrile rubber

Sealing washer (parallel threads):
Nitrile 'O'-ring

Thread sealant:
Non-PTFE

PNEUFIT C

Metric Ø 4 … 16 mm O/D tube

- Pneufit C push in fittings represent one of the industries largest ranges of industrial fittings, with in excess of 1,000 shapes and sizes
- Assembly times can be reduced to the minimum by using the parallel threaded versions, or choose taper to ensure perfect sealing under less than ideal port conditions
- Body material is either PBT or nickel plated brass offering good resistance to corrosion or contamination, and all components are retained within the body to make a perfect seal every time
- In addition to standard shapes, the range also includes manifolds, banjo flow regulators isolating valves and other items to offer maximum benefit from using standard widely available parts

Technical Data

Medium:
Compressed air

Operating pressure:
750 mm Hg to 10 bar

Ambient temperature:
-20°C … +60°C
Air supply must be dry enough to avoid ice formation at temperatures below +2°C

Tubing:
Nylon 11 or 12, polyurethane 85 to 98

Materials

Body:
PBT

Seals:
NBR (silicone free) u-packing and O-rings

Threaded bodies:
Nickel plated brass

Release sleeve and backing ring:
POM

Grab-ring:
Stainless steel

Collar:
Nickel plated brass

Thread sealant:
Chemitech G-175L

Warning: The push-in tube fittings in this section must not be used in vehicle air braking and ancillary systems. For push-in fittings suitable for these applications please refer to our Fleetfit range on our website.

PUSH-IN FITTINGS

Straight adaptors and connectors

Straight Adaptor (External & Internal) Parallel

Metric & BSPP Thread	O/D Tube	Pneufit	Pneufit C
M5	4	102250405	C02250405
M5	6	102250605	C02250605
G1/8	4	102250418	C02250418
G1/8	6	102250618	C02250618
G1/8	8	102250818	C02250818
G1/8	10	102251018	C02251018
G1/4	4	–	C02250428
G1/4	6	102250628	C02250628
G1/4	8	102250828	C02250828
G1/4	10	102251028	C02251028
G1/4	12	102251228	C02251228
G3/8	4	–	C02250438
G3/8	8	102250838	C02250838
G3/8	10	102251038	C02251038
G3/8	12	102251238	C02251238
G3/8	14	102251438	–
G3/8	16	–	C02251638
G1/2	8	–	C02250848
G1/2	10	102251048	C02251048
G1/2	12	102251248	C02251248
G1/2	14	102251448	–
G1/2	16	–	C02251648

Straight Adaptor (External & Internal) Taper

BSPT Thread	O/D Tube	Pneufit	Pneufit C
R1/8	4	101250418	C01250418
R1/8	6	101250618	C01250618
R1/8	8	101250818	C01250818
R1/8	10	101251018	C01251018
R1/8	12	–	C01251218
R1/4	4	101250428	C01250428
R1/4	6	101250628	C01250628
R1/4	8	101250828	C01250828
R1/4	10	101251028	C01251028
R1/4	12	–	C01251228
R3/8	4	–	C01250438
R3/8	6	–	C01250638
R3/8	8	101250838	C01250838
R3/8	10	101251038	C01251038
R3/8	12	101251238	C01251238
R3/8	16	–	C01251638
R1/2	6	–	C01250648
R1/2	8	101250848	C01250848
R1/2	10	101251048	C01251048
R1/2	12	101251248	C01251248
R1/2	16	–	C01251648

Straight Adaptor (Internal Hex Only) Parallel

Metric & BSPP Thread	O/D Tube	Pneufit C
M5	4	C022A0405
M5	6	C022A0605

Bulkhead Connector

O/D Tube	Bulkhead Thread	Pneufit	Pneufit C
4	M10x1,0	100290400	–
4	M12 x 1	–	C00290400
6	M14 x 1	–	C00290600
6	M14x1,5	100290600	–
8	M16 x 1	–	C00290800
8	M16x1,5	100290800	–
10	M20 x 1	–	C00291000
10	M20x1,5	100291000	–
12	M22x1	–	C00291200
12	M24x1,5	100291200	–
14	M24x1,5	100291400	–

Straight Union (Equal)

O/D Tube	O/D Tube	Pneufit	Pneufit C
4	4	100200400	C00200400
6	6	100200600	C00200600
8	8	100200800	C00200800
10	10	100201000	C00201000
12	12	100201200	C00201200
14	14	100201400	–
16	16	–	C00201600

Straight Union (Unequal)

O/D Tube	O/D Tube	Pneufit C
6	4	C00200604
8	4	C00200804
8	6	C00200806
10	6	C00201006
10	8	C00201008
12	8	C00201208
12	10	C00201210
16	12	C00201612

Straight Adaptor (Female Thread)

Thread	O/D Tube	Pneufit C
M5	4	C02260405
G1/8	4	C02260418
G1/8	6	C02260618
G1/8	8	C02260818
G1/8	10	C02261018
G1/4	4	C02260428
G1/4	6	C02260628
G1/4	8	C02260828
G1/4	10	C02261028
G1/4	12	C02261228
G3/8	4	C02260438
G3/8	6	C02260638
G3/8	8	C02260838
G3/8	10	C02261038
G3/8	12	C02261238
G1/2	8	C02260848
G1/2	10	C02261048
G1/2	12	C02261248

Stem Reducer

O/D Stem	O/D Tube	Pneufit	Pneufit C
6	4	100230604	C00230604
8	4	100230804	C00230804
8	6	100230806	C00230806
10	4	100231004	–
10	6	–	C00231006
10	8	100231008	C00231008
12	6	100231206	C00231206
12	8	100231208	C00231208
12	10	100231210	C00231210
14	8	100231408	–
14	10	100231410	–
14	12	100231412	–
16	12	–	C00231612

Stem Union (Equal)

O/D Stem	Pneufit	Pneufit C
4	100220400	C00220400
6	100220600	C00220600
8	100220800	C00220800
10	100221000	C00221000
12	100221200	C00221200

Stem Expander (Stem/Tube)

O/D Stem	O/D Tube	Pneufit C
4	6	C00230406
6	8	C00230608

PUSH-IN FITTINGS

Straight adaptors and connectors

Straight Stem Adaptor - Parallel

BSPP Thread	O/D Stem	Pneufit
G1/8	4	102150418
G1/8	5	102150518
G1/8	6	102150618
G1/8	8	102150818
G1/4	4	102150428
G1/4	5	102150528
G1/4	6	102150628
G1/4	8	102150828
G1/4	10	102151028
G3/8	8	102150838
G3/8	10	102151038
G3/8	12	102151238
G3/8	14	102151438
G1/2	10	102151048
G1/2	12	102151248
G1/2	14	102151448

Straight Stem Adaptor - Taper

BSPT Thread	O/D Stem	Pneufit
R1/8	4	101150418
R1/8	6	101150618
R1/8	8	101150818
R1/4	4	101150428
R1/4	6	101150628
R1/4	8	101150828
R1/4	10	101151028
R3/8	10	101151038
R3/8	12	101151238
R1/2	12	101151248

Plug

O/D Tube	Pneufit C
4	C00040400
6	C00040600
8	C00040800
10	C00041000
12	C00041200
16	C00041600

Cap (Female Plug)

O/D Tube	Pneufit C
4	C00120400
6	C00120600
8	C00120800
10	C00121000
12	C00121200

Elbow Union (Equal)

O/D Tube	O/D Tube	Pneufit	Pneufit C
4	4	100400400	C00400400
6	6	100400600	C00400600
8	8	100400800	C00400800
10	10	100401000	C00401000
12	12	100401200	C00401200
14	14	100401400	–
16	16	–	C00401600

Stem Elbow (Equal)

O/D Tube	O/D Stem	Pneufit	Pneufit C
4	4	100430400	C00430400
6	6	100430600	C00430600
8	8	100430800	C00430800
10	10	–	C00431000
12	12	–	C00431200
16	16	–	C00431600

90° Swivel Elbow Adaptor - Parallel

Metric & BSPP Thread	O/D Tube	Pneufit	Pneufit C
M5	4	102470405	C02470405
M5	6	102470605	C02470605
G1/8	4	102470418	C02470418
G1/8	6	102470618	C02470618
G1/8	8	102470818	C02470818
G1/8	10	102471018	C02471018
G1/4	4	102470428	C02470428
G1/4	6	102470628	C02470628
G1/4	8	102470828	C02470828
G1/4	10	102471028	C02471028
G1/4	12	–	C02471228
G3/8	4	–	C02470438
G3/8	6	–	C02470638
G3/8	8	102470838	C02470838
G3/8	10	102471038	C02471038
G3/8	12	102471238	C02471238
G3/8	14	102471438	–
G3/8	16	–	C02471638
G1/2	8	–	C02470848
G1/2	10	–	C02471048
G1/2	12	102471248	C02471248
G1/2	14	102471448	–
G1/2	16	–	C02471648

90° Swivel Elbow Adaptor - Taper

BSPT Thread	O/D Tube	Pneufit	Pneufit C
R1/8	4	101470418	C01470418
R1/8	6	101470618	C01470618
R1/8	8	101470818	C01470818
R1/8	10	101471018	C01471018
R1/8	12	–	C01471218
R1/4	4	101470428	C01470428
R1/4	6	101470628	C01470628
R1/4	8	101470828	C01470828
R1/4	10	101471028	C01471028
R1/4	12	–	C01471228
R3/8	4	–	C01470438
R3/8	6	–	C01470638
R3/8	8	101470838	C01470838
R3/8	10	101471038	C01471038
R3/8	12	101471238	C01471238
R3/8	16	–	C01471638
R1/2	6	–	C01470648
R1/2	8	101470848	C01470848
R1/2	10	101471048	C01471048
R1/2	12	101471248	C01471248
R1/2	16	–	C01471648

Bulkhead Swivel Elbow Connector

O/D Tube	Bulkhead thread	Pneufit C
4	M12 x1,0	C00490400
6	M14x1,0	C00490600
8	M16 x 1	C00490800
10	M20 x 1	C00491000
12	M22 x 1	C00491200

45° Swivel Adaptor - Parallel

BSPP Thread	O/D Stem	Pneufit
G1/8	6	102570618
G1/8	8	102570818
G1/4	6	102570628
G1/4	8	102570828

PUSH-IN FITTINGS

Y connectors

Union Y (Equal)

O/D Tube	Pneufit	Pneufit C
4	100820400	C00820400
6	100820600	C00820600
8	100820800	C00820800
10	100821000	C00821000
12	–	C00821200

Union Y (Unequal)

O/D Tube	O/D Tube	Pneufit C
4	6	C00820604
4	8	C00820804
6	8	C00820806
6	10	C00821006
8	10	C00821008
8	12	C00821208
10	12	C00821210

Swivel Y Adaptor - Parallel

Metric & BSPP Thread	O/D Tube	Pneufit C
M5	4	C02880405
M5	6	C02880605
G1/8	4	C02880418
G1/8	6	C02880618
G1/8	8	C02880818
G1/8	10	C02881018
G1/4	4	C02880428
G1/4	6	C02880628
G1/4	8	C02880828
G1/4	10	C02881028
G1/4	12	C02881228
G3/8	4	C02880438
G3/8	6	C02880638
G3/8	8	C02880838
G3/8	12	C02881238
G1/2	6	C02880648
G1/2	8	C02880848
G1/2	10	C02881048
G1/2	12	C02881248

Swivel Y Adaptor - Taper

BSPT Thread	O/D Tube	Pneufit C
R1/8	4	C01880418
R1/8	6	C01880618
R1/8	8	C01880818
R1/8	10	C01881018
R1/4	4	C01880428
R1/4	6	C01880628
R1/4	8	C01880828
R1/4	10	C01881028
R3/8	4	C01880438
R3/8	6	C01880638
R3/8	8	C01880838
R3/8	10	C01881038
R1/2	6	C01880648
R1/2	8	C01880848
R1/2	10	C01881048

Stem Y (Equal)

O/D Stem	O/D Tube	Pneufit C
4	4	C00840400
6	6	C00840600
8	8	C00840800
10	10	C00841000
12	12	C00841200

Stem Y (Unequal)

O/D Stem	O/D Tube	Pneufit C
6	4	C00840604
8	6	C00840806
10	8	C00841008
12	10	C00841210

Union Tee (Equal)

	Pneufit	Pneufit C
O/D Tube		
4	100600400	C00600400
6	100600600	C00600600
8	100600800	C00600800
10	100601000	C00601000
12	100601200	C00601200
14	100601400	–
16	–	C00601600

Union Tee (Unequal)

		Pneufit C
O/D Tube	**O/D Tube**	
4	6	C006A0604
6	8	C006A0806
6	10	C006A1006
8	10	C006A1008
8	12	C006A1208
10	12	C006A1210
10	16	C006A1610
12	16	C006A1612

Swivel Tee Adaptor - Parallel

		Pneufit	Pneufit C
Metric & BSPP Thread	**O/D Tube**		
M5	4	–	C02670405
M5	6	–	C02670605
G1/8	4	102670418	C02670418
G1/8	6	102670618	C02670618
G1/8	8	102670818	C02670818
G1/8	10	–	C02671018
G1/4	4	–	C02670428
G1/4	6	102670628	C02670628
G1/4	8	102670828	C02670828
G1/4	10	102671028	C02671028
G1/4	12	–	C02671228
G3/8	4	–	C02670438
G3/8	6	–	C02670638
G3/8	8	102670838	C02670838
G3/8	10	102671038	C02671038
G3/8	12	102671238	C02671238
G3/8	14	102671438	–
G3/8	16	–	C02671638
G1/2	8	–	C02670848
G1/2	10	–	C02671048
G1/2	12	–	C02671248
G1/2	14	102671448	–
G1/2	16	–	C02671648

Swivel Tee Adaptor - Taper

		Pneufit	Pneufit C
BSPT Thread	**O/D Tube**		
R1/8	4	101670418	C01670418
R1/8	6	101670618	C01670618
R1/8	8	101670818	C01670818
R1/8	10	–	C01671018
R1/8	12	–	C01671218
R1/4	4	101670428	C01670428
R1/4	6	101670628	C01670628
R1/4	8	101670828	C01670828
R1/4	10	101671028	C01671028
R1/4	12	–	C01671228
R3/8	4	–	C01670438
R3/8	6	–	C01670638
R3/8	8	101670838	C01670838
R3/8	10	101671038	C01671038
R3/8	12	101671238	C01671238
R1/2	6	–	C01670648
R1/2	8	–	C01670848
R1/2	10	101671048	C01671048
R1/2	12	101671248	C01671248

Stem Tee (Equal)

		Pneufit C
O/D Stem	**O/D Tube**	
4	4	C00630400
6	6	C00630600
8	8	C00630800
10	10	C00631000
12	12	C00631200

Stem Tee (Unequal)

		Pneufit C
O/D Stem	**O/D Tube**	
6	4	C00630604
8	6	C00630806
10	8	C00631008
12	10	C00631210

PUSH-IN FITTINGS

Banjo flow controler and banjo accessories

Banjo Flow Control - Parallel (Regulating Out)

Metric & BSPP Thread	O/D Tube	Pneufit	Pneufit C
M5	4	–	C0K510405
M5	6	–	C0K510605
G1/8	4	10K510418	C0K510418
G1/8	6	10K510618	C0K510618
G1/8	8	10K510818	C0K510818
G1/4	4	–	C0K510428
G1/4	6	10K510628	C0K510628
G1/4	8	10K510828	C0K510828
G1/4	10	10K511028	C0K511028
G1/4	12	–	C0K511228
G3/8	6	–	C0K510638
G3/8	8	10K510838	C0K510838
G3/8	10	10K511038	C0K511038
G3/8	12	10K511238	C0K511238
G1/2	8	–	C0K510848
G1/2	10	–	C0K511048
G1/2	12	10K511248	C0K511248

Banjo Flow Control - Taper (Regulating Out)

BSPT Thread	O/D Tube	Pneufit C
R1/8	4	C0TA00418
R1/8	6	C0TA00618
R1/8	8	C0TA00818
R1/4	4	C0TA00428
R1/4	6	C0TA00628
R1/4	8	C0TA00828
R1/4	10	C0TA01028
R1/4	12	C0TA01228
R3/8	6	C0TA00638
R3/8	8	C0TA00838
R3/8	10	C0TA01038
R3/8	12	C0TA01238
R1/2	10	C0TA01048
R1/2	12	C0TA01248

* Pressure rating on this item 10 bar.

Banjo Flow Control - Parallel (Regulating In)

Metric & BSPP Thread	O/D Tube	Pneufit C
M5	4	C0L510405
M5	6	C0L510605
G1/8	4	C0L510418
G1/8	6	C0L510618
G1/8	8	C0L510818
G1/4	4	C0L510428
G1/4	6	C0L510628
G1/4	8	C0L510828
G1/4	10	C0L511028
G3/8	8	C0L510838
G3/8	10	C0L511038
G3/8	12	C0L511238
G1/2	10	C0L511048
G1/2	12	C0L511248

Banjo Flow Control - Taper (Regulating In)

BSPT Thread	O/D Tube	Pneufit C
R1/8	4	C0SA00418
R1/8	8	C0SA00618
R1/4	4	C0SA00428
R1/4	6	C0SA00628
R1/4	8	C0SA00828
R3/8	6	C0SA00638
R3/8	8	C0SA00838
R3/8	10	C0SA01038
R3/8	12	C0SA01238
R1/2	8	C0SA00848
R1/2	10	C0SA01048
R1/2	12	C0SA01248

Shrouded Banjo (Regulating Out - Parallel)

Metric & BSPP Thread	O/D Tube	Pneufit C
M5	4	C0KB00405
M5	6	C0KB00605
G1/8	4	C0KB00418
G1/8	6	C0KB00618
G1/8	8	C0KB00818
G1/4	4	C0KB00428
G1/4	6	C0KB00628
G1/4	8	C0KB00828
G1/4	10	C0KB01028
G1/4	12	C0KB01228
G3/8	6	C0KB00638
G3/8	8	C0KB00838
G3/8	10	C0KB01038
G3/8	12	C0KB01238
G1/2	8	C0KB00848
G1/2	10	C0KB01048
G1/2	12	C0KB01248

Elbow Banjo Assembly (Non-Regulating Bolt - Parallel)

Metric & BSPP Thread	O/D Tube	Pneufit	Pneufit C
M5	4	–	C0A510405
M5	6	–	C0A510605
G1/8	4	10A510418	C0A510418
G1/8	6	10A510618	C0A510618
G1/8	8	10A510818	C0A510818
G1/4	4	–	C0A510428
G1/4	6	10A510628	C0A510628
G1/4	8	10A510828	C0A510828
G1/4	10	10A511028	C0A511028
G3/8	6	–	C0A510638
G3/8	8	10A510838	C0A510838
G3/8	10	10A511038	C0A511038
G3/8	12	–	C0A511238
G1/2	8	–	C0A510848
G1/2	10	–	C0A511048
G1/2	12	–	C0A511248

Manifold Union

O/D Tube Outlet	O/D Tube Inlet	Pneufit C
4	6	C00D30604
4	8	C00D30804
6	8	C00D30806
6	10	C00D31006
8	10	C00D31008

Union Cross

O/D Tube	Pneufit C
4	C00900400
6	C00900600
8	C00900800
10	C00901000
12	C00901200

3/2 Shut off valves (Taper Male)

BSPT Thread	Pneufit C
R1/8	C01GG1818
R1/4	C01GG2828
R3/8	C01GG3838
R1/2	C01GG4848

3/2 Shut off valves (Tube/Taper Male)

BSPT Thread	O/D Tube	Pneufit C
R1/8	6	C01GH0618
R1/8	8	C01GH0818
R1/4	6	C01GH0628
R1/4	8	C01GH0828
R1/4	10	C01GH1028
R1/4	12	C01GH1228
R3/8	6	C01GH0638
R3/8	8	C01GH0838
R3/8	10	C01GH1038
R3/8	12	C01GH1238
R1/2	10	C01GH1048
R1/2	12	C01GH1248

3/2 Shut off valves (Tube/Tube)

O/D Tube	Pneufit C
6	C00GF0600
8	C00GF0800
10	C00GF1000
12	C00GF1200

3/2 Shut off valves (Taper Male/Tube)

BSPT Thread	O/D Tube	Pneufit C
R1/8	6	C01GJ0618
R1/8	8	C01GJ0818
R1/4	6	C01GJ0628
R1/4	8	C01GJ0828
R1/4	10	C01GJ1028
R1/4	12	C01GJ1228
R3/8	6	C01GJ0638
R3/8	8	C01GJ0838
R3/8	10	C01GJ1038
R3/8	12	C01GJ1238
R1/2	10	C01GJ1048
R1/2	12	C01GJ1248

Pneufit C
Selection Box

We know that many of our customers use a wide range of fittings, and if they have an emergency, valuable time is wasted looking for a replacement.

Solve this problem by ordering our selection boxes for immediate use when required. Four kits available covering popular tube sizes:

- Up to 360 items in each kit – straight connectors, elbows, tees, tube connectors, plugs
- Includes handy tube cutter ensuring perfect joint
- Strong moulded carry case
- Contents identified for easy re-ordering

Model	Type
NE/11152	4 & 6 mm fittings kit
NE/11154	6 & 8 mm fittings kit
NE/11433	8 & 10 mm fittings kit
NE/11376	10 & 12 mm fittings kit

Engineering GREAT Solutions

Find out more
www.imi-precision.com

IMI NORGREN

BSP & HOSE FITTINGS

M5, 1/8" … 1" BSP

- Bright nickel plated
- Corrosion resistant
- Compact design
- Washers included where necessary

Technical Data

Medium:
Compressed air or any fluids compatible with the materials listed opposite.

Operating pressure:
Generally limited by tubing specification, except non regulating banjo bolts (max 18 bar) and regulating banjo bolts (max 10 bar) due to sealing washer.

Ambient temperature:
Generally limited by tubing specification except where plastic sealing washers are used (banjo bolts, and M5 units). In these cases temperature is limited to +70°C.

Materials

Brass type OT UNI EN 12164/5 CW614/7N and undergo a nickel-plating process

Sealing washers:
Copper (Acetal for M5 items)

Sleeve Adaptor (Parallel Threads)

Metric & BSPP Thread	Metric & BSPP Thread	Model
M5	M5	160220505
G1/8	M5	160221805
G1/8	G1/8	160221818
G1/4	G1/8	160222818
G1/4	G1/4	160222828
G3/8	G1/8	160223818
G3/8	G1/4	160223828
G3/8	G3/8	160223838
G1/2	G1/8	160224818
G1/2	G1/4	160224828
G1/2	G3/8	160224838
G1/2	G1/2	160224848
G3/4	G1/2	160226848
G3/4	G3/4	160226868
G1	G3/4	160228868
G1	G1	160228888

Reducing Connector

Reducing		
Male BSPT	Female BSPP	Model
R1/8	G1/8	150231818
R1/4	G1/8	150232818
R1/4	G1/4	150232828
R3/8	G1/8	150233818
R3/8	G1/4	150233828
R3/8	G3/8	150233838
R1/2	G1/8	150234818
R1/2	G1/4	150234828
R1/2	G3/8	150234838
R1/2	G1/2	150234848
R3/4	G1/4	150236828
R3/4	G3/8	150236838
R3/4	G1/2	150236848
R1	G1/2	150238848
R1	G3/4	150238868

Reducing Connector (Parallel)

Reducing Male BSPP	Female and BSPP Thread	Model
G1/8	M5	160231805
G1/4	G1/8	160232818
G3/8	G1/8	160233818
G3/8	G1/4	160233828
G1/2	G1/8	160234818
G1/2	G1/4	160234828
G1/2	G3/8	160234838
G3/4	G1/4	160236828
G3/4	G3/8	160236838
G3/4	G1/2	160236848

Bulkhead Connector

Metric & BSPP Thread	Male Metric Thread	Model
M5	M10x1,0	160290005
G1/8	M16x1,5	160290018
G1/4	M20x1,5	160290028
G3/8	M26x1,5	160290038
G1/2	M28x1,5	160290048
G3/4	M33x1,5	160290068
G1	M42x1,5	160290088

Supplied with locknut.

BSP & HOSE FITTINGS

M5, 1/8" … 1" BSP

Expanding Connector (Parallel)

Metric & BSPP Thread	Female BSPP	Model
M5	G1/8	160230518
G1/8	G1/4	160231828
G1/8	G3/8	160231838
G1/4	G3/8	160232838
G1/4	G1/2	160232848
G3/8	G1/2	160233848
G1/2	G3/4	160234868

Supplied with sealing washer.

Expanding Connector (Taper)

Expanding Male BSPT	Female BSPP	Model
R1/8	G1/4	150231828
R1/8	G3/8	150231838
R1/8	G1/2	150231848
R1/4	G3/8	150232838
R1/4	G1/2	150232848
R3/8	G1/2	150233848
R3/8	G3/4	150233868
R1/2	G3/4	150234868
R3/4	G1	150236888

Nipple Adaptor (Parallel Threads)

Metric & BSPP Thread	Metric & BSPP Thread	Model
G1/8	G1/8	160201818
G1/4	G1/8	160202818
G1/4	G1/4	160202828
G3/8	G1/4	160203828
G3/8	G3/8	160203838
G1/2	G1/4	160204828
G1/2	G3/8	160204838
G1/2	G1/2	160204848
G3/4	G1/2	160206848
G3/4	G3/4	160206868
G1	G3/4	160208868
G1	G1	160208888

Supplied with sealing washer.

Nipple Adaptor (Taper Threads)

BSPT Thread	BSPT Thread	Model
R1/4	R1/8	150202818
R1/4	R1/4	150202828
R3/8	R1/8	150203818
R3/8	R1/4	150203828
R3/8	R3/8	150203838
R1/2	R1/8	150204818
R1/2	R1/4	150204828
R1/2	R3/8	150204838
R1/2	R1/2	150204848
R3/4	R1/2	150206848
R3/4	R3/4	150206868
R1	R3/4	150208868
R1	R1	150208888

Elbow Connector (Parallel Threads)

Female BSPP	Model
G1/8	160420018
G1/4	160420028
G3/8	160420038
G1/2	160420048
G3/4	160420068

Plug (Parallel Threads)

Metric & BSPP Threads	Model
M5	160050005
G1/8	160050018
G1/4	160050028
G3/8	160050038
G1/2	160050048
G3/4	160050068
G1	160050088

Supplied with sealing washers.

Tee Connector

Male BSPT	Female BSPP	Model
R1/8	G1/8	150690018
R1/4	G1/4	150690028
R3/8	G3/8	150690038
R1/2	G1/2	150690048

Elbow Connector

Male BSPT	Female BSPP	Model
R1/8	G1/8	150430018
R1/4	G1/4	150430028
R3/8	G3/8	150430038
R1/2	G1/2	150430048
R3/4	G3/4	150430068

Tee Connector (Parallel Threads)

Female BSPP	Model
G1/8	160620018
G1/4	160620028
G3/8	160620038
G1/2	160620048
G3/4	160620068

Hose Adaptor (Parallel Threads)

Hose Bore mm	BSPP Thread	Model
3	M5	292170305
4	G1/8	292170418
6	G1/8	292170618
6	G1/4	292170628
9	G1/8	292170918
9	G1/4	292170928
9	G3/8	292170938
9	G1/2	292170948
19	G3/4	292171968

Supplied with sealing washer.

Hose Adaptor (Taper Threads)

Hose Bore mm	BSPT Thread	Model
7	R1/8	291170718
7	R1/4	291170728
7	R3/8	291170738
8	R1/4	291170828
8	R3/8	291170838
10	R1/4	291171028
10	R3/8	291171038
12	R3/8	291171238
16	R3/8	291171638
16	R1/2	291171648
25	R3/4	291172568
25	R1	291172588

Elbow Banjo Assembly Non-Regulating (Parallel Threads)

Male BSPP	Female BSPP	Model
G1/8	G1/8	16A511818
G1/4	G1/4	16A512828
G3/8	G3/8	16A513838
G1/2	G1/2	16A514848

Female parallel BSP thread to male parallel BSP thread.

Elbow Banjo Assembly Regulating Out (Parallel Threads)

Male BSPP	Female BSPP	Model
G1/8	G1/8	16K511818
G1/4	G1/4	16K512828
G3/8	G3/8	16K513838
G1/2	G1/2	16K514848

Arrow on bolt hexagon indicates free flow direction.
Pressure range 1 … 10 bar.

TUBING & HOSES

Ø 4 … 16 mm O/D

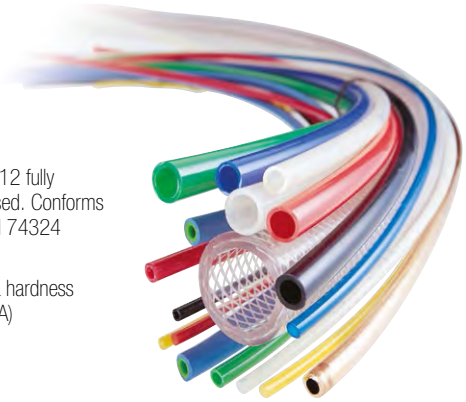

- Available in a range of colours for ease of identification
- In addition to general industrial applications Nylon is suitable for use on air braking systems of commercial vehicles and conforms to DIN 74324. (Applicable sizes; 6, 8, 10, 12, 16 mm O/D)
- 25 metre lengths supplied in cartons providing good protection and easy storage
- Polyurethane offers excellent mechanical properties and industry leading flexibility

Technical Data

Medium:
Compressed air. Consult our Technical Service for use with other fluids.

Operating pressure:
See table below

Materials

Nylon tube:
Nylon (polyamide) type PA12 fully plasticised and light stabilised. Conforms to material standard of DIN 74324

Polyurethane tube:
Is light stabilised and has a hardness of Shore D 52 (98 Shore A)

Maximum operating pressures and bend radii

O/D mm		4	6	8	10	12	14	16
Max. pressure (bar)* at -40°C … +20°C	Nylon	31	27	19	19	19	16	19
	Polyurethane	10	9	9	9	9	–	–
Min. bend radius mm	Nylon	25	30	40	60	60	80	95
	Polyurethane	6	9	16	17	25	–	–

Maximum continuous working temperature: nylon +80°C, polyurethane +60°C.
* Multiply by factors in table below for use at higher temperatures.

Operating pressure/temperature conversion factors

Working temperature	Factor (Nylon)	Factor (Polyurethane)
-40°C … +20°C	1	1
+30°C	0,83	0,85
+40°C	0,75	0,7
+50°C	0,64	0,6
+60°C	0,57	0,5
+80°C	0,47	–

To calculate working pressures at various temperatures, multipy working pressure at -40°C … +20°C by factor given in table.
Maximum continuous working temperature: Nylon +80°C, Polyurethane +60°C.

Tube sizes (metric)

O/D mm	4	6	8	10	12	14	16
Nylon	•	•	•	•	•	•	•
Polyurethane	•	•	•	•	•	–	–

PRODUCT LINKS

Perfect for use with blow gun installations...

For blow gun range see page 208

For preset regulator R16 see the air preparation section

Nylon tube

Colour	Length (m)	O/D I/D tube						
		4/2,5*	6/4	8/6	10/7,5	12/9	14/11*	16/12
Natural	25	PA2-0004025C	PA2-0006025C	PA2-0008025C	PA2-0010025C	PA2-0012025C	PA2-0014025C	PA2-0016025C
Red	25	PA2-0104025C	PA2-0106025C	PA2-0108025C	PA2-0110025C	PA2-0112025C	–	–
Yellow	25	PA2-0304025C	PA2-0306025C	PA2-0308025C	PA2-0310025C	PA2-0312025C	–	–
Blue	25	PA2-0504025C	PA2-0506025C	PA2-0508025C	PA2-0510025C	PA2-0512025C	PA2-0514025C	PA2-0516025C
Black	25	PA2-0704025C	PA2-0706025C	PA2-0708025C	PA2-0710025C	PA2-0712025C	PA2-0714025C	PA2-0716025C

Note: 'C' at last digit in part number indicates packed in a box/carton.
* Tube size does not conform to DIN 74324.

Polyurethane tube

Colour	Length (m)					
		4/2,5	6/4	8/5,5	10/7	12/8
Natural	25	PU2-0004025C	PU2-0006025C	PU2-0008025C	PU2-0010025C	PU2-0012025C
Red	25	PU2-0104025C	PU2-0106025C	PU2-0108025C	PU2-0110025C	PU2-0112025C
Yellow	25	PU2-0304025C	PU2-0306025C	PU2-0308025C	PU2-0310025C	PU2-0312025C
Blue	25	PU2-0504025C	PU2-0506025C	PU2-0508025C	PU2-0510025C	PU2-0512025C
Black	25	PU2-0704025C	PU2-0706025C	PU2-0708025C	PU2-0710025C	PU2-0712025C

Note: 'C' at last digit in part number indicates packed in a box/carton.

Pneuflex Tubing

Model	O/D tube	Adaptor (thread)	Length of closed spiral	Working length (mm)	Operating pressure (bar)
PU310600218	6	R1/8	165	2000	10
PU310800228	8	R1/4	180	2000	10
PU310800428	8	R1/4	400	4000	10

Tube cutter

Model	Type
M/3314	Cutter

For use on nylon and polyurethane tubing 4 … 16 mm.

Tubing channels

Model	O/D Tube	No. of channels
100HA0600	6	10
100HA0800	8	10

SILENCERS

POROUS PLASTIC SILENCERS
M/S

- Reduce the noise levels of pneumatic equipment
- Compact, efficient and lightweight
- Operating pressure is -1 … 10 bar
- Operating temperature is -20ºC … +80ºC

Technical Data

Medium:
Compressed air, filtered 50 µm, lubricated and non lubricated/vacuum, inert gases

Operating pressure:
-1 … 10 bar maximum (vacuum service)

Media temperature:
-20°C … +80°C
Air supply must be dry enough to avoid ice formation at temperatures below +2°C

Materials

Body:
UHMW PE porous plastic

Connector base:
PE (black)

SINTERED BRONZE SILENCERS
T40

- Reduce the noise levels of pneumatic equipment
- Compact and efficient
- Operating pressure is 10 bar max.
- Operating temperature is -20ºC … +80ºC

Technical Data

Medium:
Compressed air, filtered, lubricated or non lubricated, vacuum, Inert gases

Operating pressure:
10 bar maximum

Media temperature:
-20°C … +80°C
Air supply must be dry enough to avoid ice formation at temperatures below +2°C

Materials

Body:
Brass

Element:
Sintered bronze

EXHAUST FILTERS
M/1500 series

- Prevent the ingress of dirt with minimal flow restriction
- Robust and compact
- Operating pressure is 10 bar max.
- Operating temperature is -20ºC … +80ºC

Technical Data

Medium:
Compressed air, filtered, lubricated or non-lubricated, inert gases

Operating pressure:
10 bar max.

Media temperature:
-20°C … +80°C
Air supply must be dry enough to avoid ice formation at temperatures below +2°C

Materials

Body:
Aluminium alloy

Element:
Sintered bronze

SILENCERS

QUIETAIRE HEAVY DUTY SILENCERS

MB Series

- Reduce the noise levels of pneumatic equipment
- Prevent open line exhaust dangers
- Corrosion resistant
- High flow capacity with low back pressure
- Brass mesh screen and aluminium construction provide improved flow, longer life and cleanable element
- Prevent metal chips, abrasive grits, dust and other contaminants from entering open exhaust ports

Technical Data

Medium:
Compressed air, filtered, lubricated and non-lubricated, inert gases

Operating pressure:
-1 … 20 bar

Ambient temperature:
-20°C … +80°C

Operation:
Exhaust silencer

Mounting:
Directly in the exhaust port

Materials

Aluminium body and shell, brass mesh element

Standard silencers




	Porous Plastic	Sintered Bronze	Exhaust Filter	Quietaire
Male Thread				
M5	M/S0	T40M0500	–	–
G1/8	M/S1	T40C1800	M/1511	–
R1/8	–	T40B1800	–	MB001B
G1/4	M/S2	T40C2800	M/1512	–
R1/4	–	T40B2800	–	MB002B
G3/8	M/S3	T40C3800	–	–
R3/8	–	T40B3800	–	MB003B
G1/2	M/S4	T40C4800	M/1514	–
R1/2	–	T40B4800	–	MB004B
G3/4	M/S6	T40C6800	M/1516	–
R3/4	–	T40B6800	–	MB006B
G1	M/S8	T40C8800	M/1518	–
R1	–	T40B8800	–	MB008B

QUICK RELEASE COUPLINGS

238 Series

- Single shut off: The hose connection (plug) has a through bore whilst the upstream coupling shuts off immediately when the connection is broken. The ideal solution for simple air tools or similar
- Single handed operation
- European standard industrial coupling
- High flow rate, low pressure drop
- Industrial standard profile

Technical Data

Operating pressure:
0 … 35 bar

Working temperature:
-20°C … +100°C
Air supply must be dry enough to avoid ice formation at temperatures below +2°C

Air flow:
1000 l/min (input pressure 6 bar, pressure drop 0,5 bar)

Materials

Coupling:

Body & Sleeve:
Nickel plated brass

Valve:
Brass

Spring & Locking ring/balls:
Stainless steel

Seals:
NBR

Plug:

Body:
Nickel plated brass

Coupling with BSPP male thread

Type	B	Model
Coupling Male Thread	G1/4	238210028
Coupling Male Thread	G3/8	238210038
Coupling Male Thread	G1/2	238210048

Plug with BSPP male thread

Type	B	Model
Plug Male Thread	G1/4	238110028
Plug Male Thread	G3/8	238110038
Plug Male Thread	G1/2	238110048

Coupling with BSPP female thread

Type	B	Model
Coupling Female Thread	G1/4	238220028
Coupling Female Thread	G1/2	238220048

Plug with BSPP female thread

Type	B	Model
Plug Female Thread	G1/4	238120028
Plug Female Thread	G3/8	238120038
Plug Female Thread	G1/2	238120048

Coupling with metric hose tail

Type	Hose Bore Ø A	Model
Coupling Hose Barb	6	238230600
Coupling Hose Barb	9	238230900
Coupling Hose Barb	13	238231300

Plug with metric hose tail

Type	Hose Bore Ø A	Model
Plug Hose Barb	6	238130600
Plug Hose Barb	9	238130900
Plug Hose Barb	13	238131300

BALL VALVES

60 Series Brass 1/8" … 1 1/2" BSP

- Precision engineered shut-off valves
- Minimum resistance to fluid flow
- Positive quick open/shut action
- Flow in either direction (except exhaust type)

Technical Data

Medium:
Compressed air, inert gases, water, depending upon valve seat material

Operating pressure:
Refer to tables

Ambient temperature:
Refer to tables

Materials

60 Series:
Nickel plated brass to UNI-5705-65, chromium plated brass, zinc plated steel, PTFE seats and nitrile or Fkm rubber seals

Standard full bore

Model	Female (B)	Maximum pressure (bar)
602112128	Rp1/4	40
602112138	Rp3/8	40
602112148	Rp1/2	40
602112168	Rp3/4	40
602112188	Rp1	40
6021121A8	Rp1 1/4	40
6021121B8	Rp1 1/2	40
6021121C8	Rp2	40

PTFE seats, HNBR seals Operating temperature: -15°C … +90°C.

Exhausting full bore

Model	Female (B)	Maximum pressure (bar)
602113128EX	G1/4	12
602113138EX	G3/8	12
602113148EX	G1/2	12
602113168EX	G3/4	12
602113188EX	G1	12

PTFE seats, nitrile seals Operating temperature: 0°C … +60°C.

Lockable Exhausting full bore

Model	Female (B)	Maximum pressure (bar)
601812128	G1/4	13,6
601812138	G3/8	13,6
601812148	G1/2	13,6
601812168	G3/4	13,6
601812188	G1	13,6

Note: lever lockable only in closed position Standard handle accepts Ø 7 mm shackle.
Operating Temperarture -10°C … +100°C.

Mini Reduced bore

Model	Female (B)	Maximum pressure (bar)
601112118	G1/8	10
601112128	G1/4	10
601112138	G3/8	10
601112148	G1/2	10

Model	Female/ Male (B)	Maximum pressure (bar)
601112218	G1/8	10
601112228	G1/4	10
601112238	G3/8	10
601112248	G1/2	10

PTFE seats, nitrile seals Operating temperature: -10°C … +90°C.

MANUALLY ACTUATUED SLEEVE VALVE

M/7300 3/2, G1/8 … G1/2

- Sliding sleeve operation
- Very compact in-line units Easy to install
- Very simple and reliable operation 3/2 function

Technical Data

Medium:
Compressed air, filtered, lubricated and non-lubricated

Operation:
Sleeve valve, directly actuated, with open exhaust

Operating pressure:
10 bar max.

Mounting:
Concentrically directly in the pipework

Ambient temperature:
-20°C … +80°C max.
Air supply must be dry enough to avoid ice formation at temperatures below +2°C

Materials

Body:
Chrome-nickel plated brass

Sleeve:
Grey anodised aluminium

Seals:
NBR

Models

Model	Port size	Flow 1 » 2 at 6 » 5 bar (Nl/min)
M/7318	G1/8	376
M/7328	G1/4	775
M/7338	G3/8	1590
M/7348	G1/2	3025

BLOW GUNS

BG Series

BG4000:
- Bright chrome finish
- Cushioned corporate vinyl thumb grip
- Exhausts air when nozzle is blocked
- Complies with O.S.H.A.

BG5000:
- One piece design in moulded high impact plastic
- Exhausts air when nozzle is blocked
- Complies with O.S.H.A.

Technical Data

Medium:
Non-lubricated compressed air, filtered

Connection:
G1/4 (BG4000 and BG5000)

Operating pressure:
10 bar maximum line pressure
The USA O.S.H.A. recommendations state that nozzle pressures should not exceed 2 bar. This ensures that the blocked end condition pressure will not exceed the 0,4 bar that could penetrate human skin with possibly fatal consequences. Blow guns should always be supplied through a suitable pressure regulator to ensure safe operation

Materials

Body:
BG4000: brass bright chrome finish
BG5000: one piece design in moulded high impact plastic

Models

Model	Port size	Description
BG4000	G1/4	Metal Blow Gun
BG5000	G1/4	Plastic Blow Gun

PRODUCT LINKS

Have you seen...

We also have 3/2 shut off valves complete with push in fittings and/or BSP threads

See Pneufit C series in this section

BLOCK FORM FLOW REGULATORS

T1000 and T1100 Uni-directional (T1000) – M5, G1/8 … G1/2 Bi-directional (T1100) – G1/8 … G1/4

- Compact size/low weight/ in-line units
- High flow performance
- Suitable for panel and wall mounting
- Two way flow control (T1100 series)
- Adjustment can be locked
- Captive regulator needle will not blow out when unscrewed
- Adjusting knob position line

Technical Data

Medium:
Compressed air, filtered, lubricated or non-lubricated, inert gases

Operating pressure:
1 … 10 bar (T1000 series G1/8 … G1/2)
0,3 … 10 bar (T1000 series M5)
0 … 10 bar (T1100 series)

Ambient temperature:
-20°C … +80°C
Air supply must be dry enough to avoid ice formation at temperatures below +2°C

Materials

Body:
Aluminium alloy

Seals:
Nitrile

Needle and internal parts:
Brass

External parts:
Aluminium alloy

Dimensions

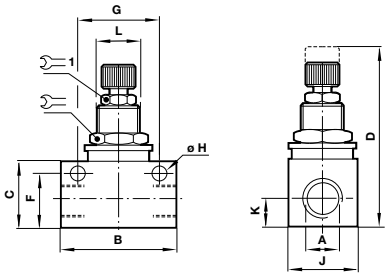

Model	A	B	C	D	F	G	Ø H	J	K	L	
T1000M0500	M5	25	15	45	12	18	4,5	12	5,5	M10 x 0,75	12
T1000C1800	G1/8	34	20	51	16,5	24	4,5	16	8	M12 x 1	14
T1000C2800	G1/4	45	25,5	61,5	21	32	4,5	19	9,5	M14 x 1	17
T1000C3800	G3/8	58	32,5	78,5	27	43	4,5	28	13	M20 x 1	24
T1000C4800	G1/2	65	36	82	30,5	50	4,5	30	15	M20 x 1	24
T1100C1800	G1/8	34	20	51	16,5	24	4,5	16	8	M12 x 1	14
T1100C2800	G1/4	45	25,4	61,5	20,8	32	4,5	19	9,5	M12 x 1	17

Models

Model	Port size	Max. regulated flow factor		Free flow factor		Opening pressure (bar)	Minimum operating pressure (bar)
		C*	CV	C*	CV		
T1000M0500	M5	0,28	0,07	0,28	0,07	0,3	0,3
T1000C1800	G1/8	0,57	0,14	1,50	0,37	< 0,1	1
T1000C2800	G1/4	1,30	0,32	2,80	0,69	< 0,1	1
T1000C3800	G3/8	4,80	1,17	6,70	1,64	< 0,1	1
T1000C4800	G1/2	7,50	1,84	8,30	2,00	< 0,1	1
T1100C1800	G1/8	0,57	0,14	–	–	–	0
T1100C2800	G1/4	1,30	0,32	–	–	–	0

* C: measured in $dm^3/(s.bar)$.

EXHAUST FLOW REGULATOR/SILENCERS

T20 M5, G1/8 … G1/2

- Compact, integral flow regulator and silencer units
- Captive regulating needle will not blow out when unscrewed
- Reduced dimensions

Technical Data

Medium:
Compressed air, filtered, lubricated and non-lubricated, inert gases

Operating pressure:
1 … 10 bar

Ambient temperature:
-20°C … +80°C
Air supply must be dry enough to avoid ice formation at temperatures below +2°C

Materials

Body and washer:
Nylon

Silencer:
Porous polyethylene

Adjusting screw:
High tensile zinc electroplated steel

Dimensions

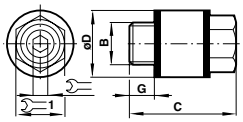

Model	B	C	G	Ø D		1
T20M0500	M5	16	5	–	1,5	8
T20C1800	G1/8	20,5	6	15	2,5	13
T20C2800	G1/4	29	7	18	4	15
T20C3800	G3/8	38	8	24	6	20
T20C4800	G1/2	50	10	30	8	25

Models

Model	Thread	Port size	Max. regulated flow factor	
			C**	CV
				
T20M0500	Metric	M5	0,3	0,07
T20C1800	BSPP	1/8	1,6	0,4
T20C2800	BSPP	1/4	3,2	0,8
T20C3800	BSPP	3/8	6,9	1,7
T20C4800	BSPP	1/2	10	2,4

** C measured in dm^3/(s.bar).

NON-RETURN VALVE

C00GL Ø 4 … 12

- High flow performance

Technical Data

Medium:
Compressed air, filtered, lubricated and non-lubricated

Operating pressure:
10 bar max.

Ambient temperature:
0°C … +60°C
Air supply must be dry enough to avoid ice formation at temperatures below +2°C

Tube sizes:
4 … 12 mm

Tubing types:
Nylon 11 or 12
Polyurethane 85, 95 or 98 durometer

Materials

Tube to tube bodies:
Ø 4 … Ø 8: PBT
Ø 10 … Ø 12: Aluminium

Threaded bodies:
Nickel plated brass

Seals:
NBR (silicone free) u-packing and O-rings

Release sleeve and backing ring:
POM

Grab-ring:
Stainless steel

Collar:
Nickel plated brass

Thread sealant:
Threebond 2350BI

Models - tube to tube

Model	Model	O/D Tube
		
C00GL0400	–	4
C00GL0600	–	6
C00GL0800	–	8
–	C00GL1000	10
–	C00GL1200	12

QUICK EXHAUST VALVES

T70 G1/8 … G1/2

- Enables air to be exhausted quickly from air reservoirs and cylinders
- Allows higher cylinder speeds to be achieved
- Simple, compact design and construction
- Very reliable in operation

Technical Data

Medium:
Compressed air, filtered, lubricated and non-lubricated

Operating pressure:
0,5 … 10 bar (T70)

Ambient temperature:
-20°C … +80°C
Air supply must be dry enough to avoid ice formation at temperatures below +2°C

Materials

Body & cover:
Zinc alloy (T70*1800 & T70*2800), aluminium alloy (T70*3800 & T70*4800)

Seals:
Nitrile (T70)

O-ring:
Nitrile

Dimensions

T70

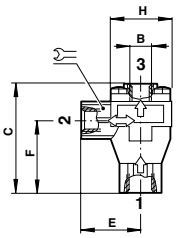

Model	B	C	E	F	
T70C1800	G1/8	53	28	35,5	19
T70C2800	G1/4	53	28	35,5	19
T70C3800	G3/8	73,5	40	48	30
T70C4800	G1/2	73,5	40	48	30

Models

Model	Port size BSPP	Flow (1 … 2)** C*	Cv	Flow (2 … 3)** C*	Cv
					
T70C1800	G1/8	3,8	0,93	7	1,72
T70C2800	G1/4	7,4	1,8	9,7	2,38
T70C3800	G3/8	14,5	3,55	20,5	5
T70C4800	G1/2	19,7	4,83	25	6,13

* C = dm^3/(s.bar). ** Flow factor measured at 6 bar inlet pressure.

Index

IMI Precision Engineering

Index

Notes

For further information, scan this QR code or visit
www.imi-precision.com

1

ACTUATORS
ROUNDLINE & COMPACT CYLINDERS
PROFILE CYLINDERS
AIR BELLOWS

2

VACUUM
VACUUM PUMPS
VACUUM CUPS & BELLOWS
VACUUM SWITCHES

3

VALVES
VALVE ISLANDS & SUB-BASE VALVES
IN-LINE & MANIFOLD VALVES
SAFETY & MANUAL/MECHANICAL VALVES
PROPORTIONAL VALVES
FLOW CONTROL VALVES

4

PRESSURE SWITCHES
ELECTRO-MECHANICAL PRESSURE SWITCHES
ELECTRONIC PRESSURE SWITCHES

5

AIR PREPARATION (FRL)
OLYMPIAN PLUS PLUG-IN SYSTEM
EXCELON® PLUS MODULAR SYSTEM
EXCELON® MODULAR SYSTEM
MINIATURE & LARGE CAPACITY SERIES
SPECIAL PURPOSE REGULATORS

6

FITTINGS, TUBING & ACCESSORIES
PUSH IN FITTINGS
BSP & HOSE FITTINGS
TUBING & HOSES
QUICK RELEASE COUPLINGS
SILENCERS, BALL VALVES & SHUT OFF VALVES

z8389CT en-neutral/04/17

IMI Precision Engineering

Engineering GREAT Solutions

Türkiye Distribütörü

POVVER

Povver Pnömatik Proses A.Ş.
İkitelli OSB Bedrettin Dalan Bulvarı Vip Plaza
A Blok Kat:2 No:41 Başakşehir/İstanbul
+90 212 293 88 70
info@povverpnomatik.com.tr
www.povverpnomatik.com.tr

IMI NORGREN®
IMI BUSCHJOST®
IMI HERION®